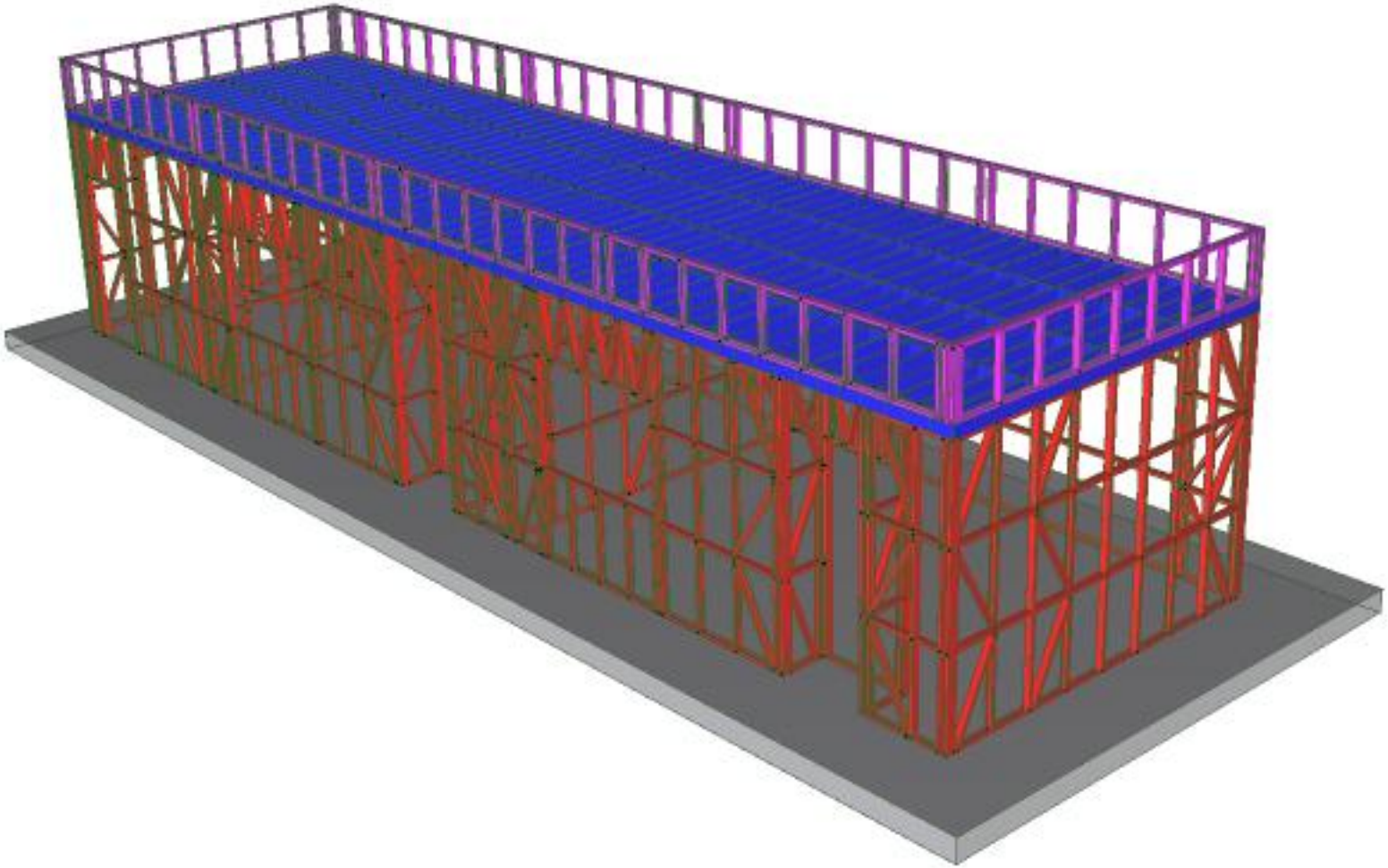

Design Summary	
Floor Type	Concrete
Roof Load	Auto
System	FRAMECAD_FT_m
Wind Load	W49

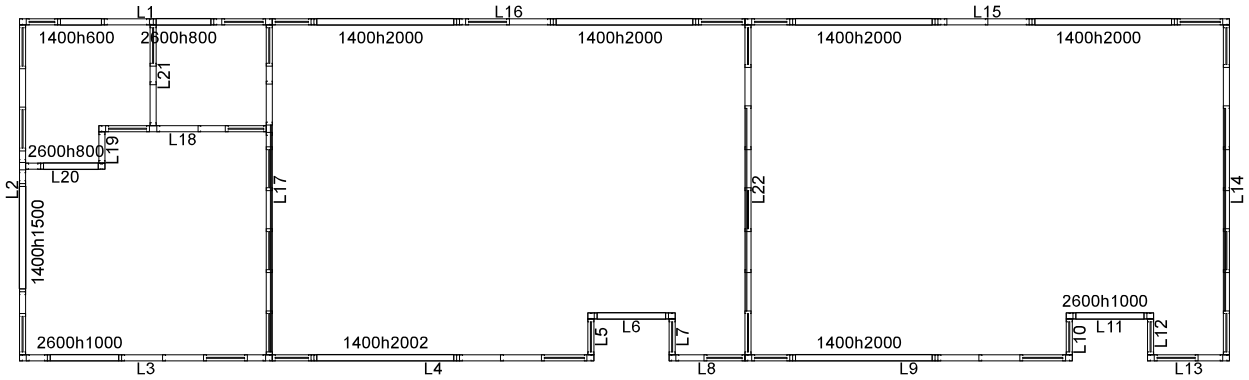

DO NOT SCALE.
IF IN DOUBT, ASK.

Wall Frame Layout

FRAMECAD	JOB DETAILS	DRAWN	DATE DRAWN	SCALE	JOB REFERENCE	REVISION
			16-03-2019	100		
		DWG FILE	VIEW NAME	ON		
		Hesaaco mehdipoor school 25-12-97	25-12-97	A4-Sheet		

Design Summary	
Floor Type	Concrete
Roof Load	Auto
System	FRAMECAD_FT_m
Wind Load	W49

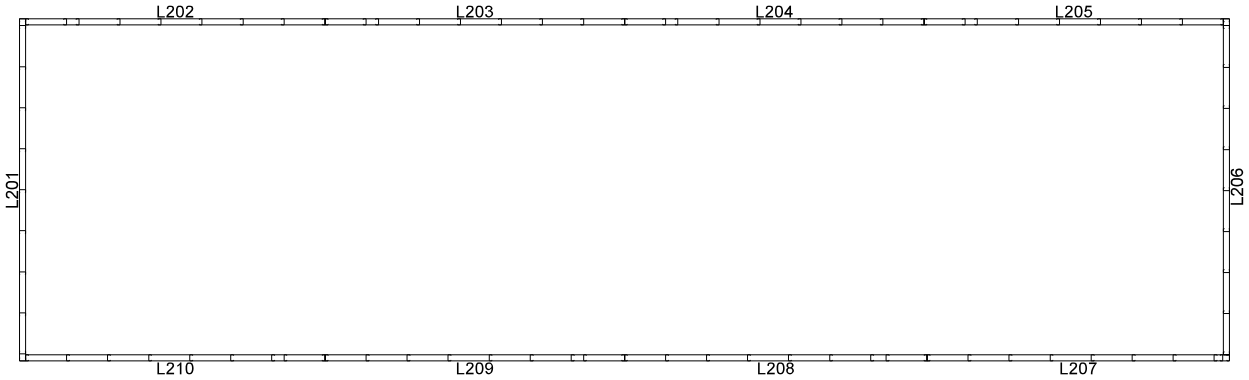

DO NOT SCALE.
IF IN DOUBT, ASK.

Wall Frame Layout

FRAMECAD	JOB DETAILS	DRAWN	DATE DRAWN	SCALE	JOB REFERENCE	REVISION
			16-03-2019	100		
		DWG FILE	VIEW NAME	ON		
		Hesaaco mehdipoor school	25-12-97	A4-Sheet		

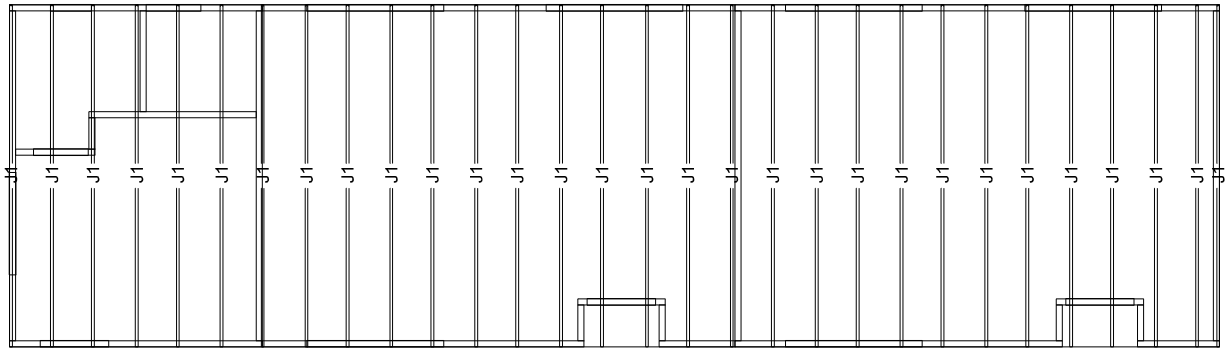

DO NOT SCALE.
IF IN DOUBT, ASK.

FRAMECAD	JOB DETAILS	DRAWN	DATE DRAWN	SCALE	JOB REFERENCE	REVISION
			16-03-2019	100		
		DWG FILE	VIEW NAME	ON		
		Hesaaco mehdipoor school 25-12-97	3 of 12	A4-Sheet		

Bracing Summary	
Wind Force 'X'	14.400
Wind Force 'Y'	65.500
Shortage 'X'	0.000
Shortage 'Y'	0.000
Resistance 'X'	47.300
Resistance 'Y'	68.700
Density 'X'	4700
Density 'Y'	3350

Force values shown in kN's

Earthquake Summary	
	IBC 2015
Foundation Type	A
Structural Ductility Factor	4
Seismic Hazard Coefficient	150
Fundamental Period	0.167
Seismic Weight	130.662
Base Shear Force	38.807
Horizontal Force	38.807

Bracing Makeup	
Brace Resistance 'X'	33.400
Brace Resistance 'Y'	64.800
Sheath Resistance 'X'	13.900
Sheath Resistance 'Y'	3.900
P/Board Resistance 'X'	0.000
P/Board Resistance 'Y'	0.000
Cladding Resistance 'X'	0.000
Cladding Resistance 'Y'	0.000

Force values shown in kN's

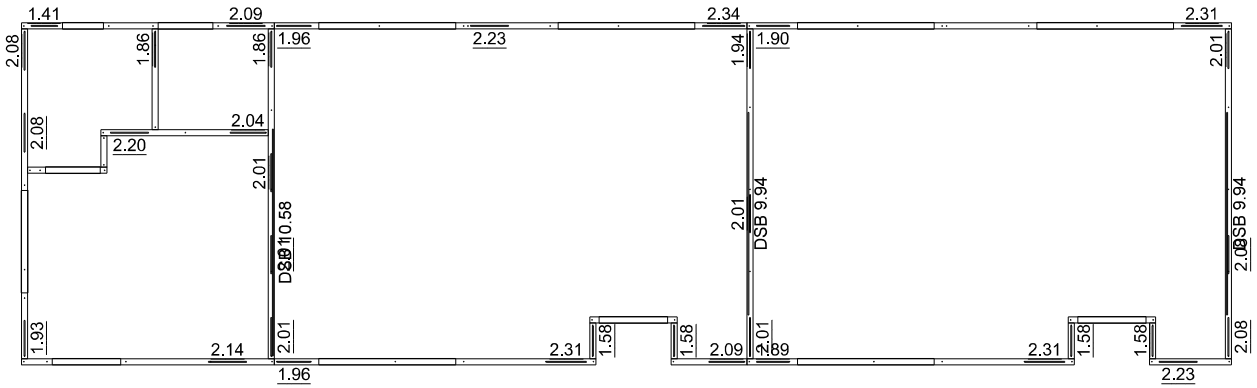

Bracing Type Summary	
???	K-Brace
DSB	Double Strap Brace

DO NOT SCALE.
IF IN DOUBT ASK.

Bracing and Racking Resistance Plan

FRAMECAD

JOB DETAILS	DRAWN	DATE DRAWN	SCALE	JOB REFERENCE	REVISION
		16-03-2019	100		
	DWG FILE	VIEW NAME	ON		
	Hesaaco mehdipoor school 25-12-97	25-12	A4-Sheet		

Stud Design for Panel L1

Company:	Framecad		
Project:	Layouts	Dwg Name:	Hesaaco mehdipoor school 25-12-97
		Detailer:	
		Print Date:	16-03-2019
Job Number:	180	Page No:	1

Panel Label:	L17
Design Basics:	
Steel Design Code	AISI S100-12 LRFD
Loading Code:	IBC 2015 LRFD
Wind Speed	W49
Snow Slope Factor	1.0
Snow Adjustment Factor	1.0
Wall Location	External
Dead Load (G)	0.876 kN/m
Live Load (Q1 = max(Q2,Q3))	0.546 kN/m
Roof Live Load (Q2)	0.000 kN/m
Floor Live Load (Q3)	0.546 kN/m
Live Load (Q4 = Q2+Q3)	0.546 kN/m
Snow Load (S)	0.000 kN/m
Wind Up Load (Wu)	0.000 kN/m
Wind Down Load (Wd)	0.000 kN/m
Wind Horizontal Load (Wh)	1.501 kPa
Panel Self Weight	0.759 kN/m
Applied Point Load (P)	1.1 kN
Impact Load (P2)	0.7 kN

Load Case Results (single stu	Maximum Stud Spacing
1.2G + +1.6Q2 + 1.0Q3	9000 mm
1.2G + 0.5Q2 + 1.6Q3	8238 mm
1.2G + 1.0Q3 + 1.6S	9000 mm
1.2G + 1.6P1	9000 mm
1.2G + 0.5Q4 + 1.0Wh	522 mm
0.9G + 1.0Wu + 1.0Wh	547 mm
0.42Wh	576 mm
P2	933 mm

Design Results:	
Stud Material	89S41-095-350
Stud Spacing Type	Single Absolute
Nominal Wall Height	3410 mm
Nominal Noggin Spacing	1170 mm
Maximum Nominal Stud Spacing	600 mm
Actual Nominal Stud Spacing	600 mm
Stud Engineering Compliance	%
Manually Altered	Yes

Section Dimensions (single stud):	
Section Height	89 mm
Section Width	41 mm
Lip Length	11.50 mm
Inside Radius	2.00 mm
Material Thickness	0.95 mm
Yield Strength	350 MPa
Tensile Strength	420 MPa

Section Properties (single stud):	
Gross Area	176.653 mm^2
Section Mass	1.387 kg/m
Centroid Left	12.92 mm
Centroid Top	44.02 mm
Second Moment of Inertia Ix	224850 mm^4
Second Moment of Inertia Iy	41508 mm^4
Radius of Gyration rx	35.68 mm
Radius of Gyration ry	15.33 mm
Shear Centre x	32.60 mm
Shear Centre y	0.00 mm
Polar Gyration ro	50.91 mm
Torsion Constant J	53 mm^4
Warping Constant Cw	72.90 E06mm^6

Section Capacities (single stud):	
Shear Capacity ΦvVn	9.46 kN
Tension Capacity ΦtTn	51.85 kN
Compression Capacity ΦcPno	33.08 kN
Compression Capacity ΦcPn	15.86 kN
Bending Capacity ΦbMnxo-	1438.05 Nm
Bending Capacity ΦbMnx-	1248.69 Nm
Bending Capacity ΦbMnxo	1438.05 Nm
Bending Capacity ΦbMnx	1248.69 Nm

Stud Design for Panel 89

Company:	Framecad		
Project:	Layouts	Dwg Name:	Hesaaco mehdipoor school 25-12-97
		Detailer:	
		Print Date:	16-03-2019
Job Number:	180	Page No:	2

Stud Design for Panel L2

Company:	Framecad		
Project:	Layouts	Dwg Name:	Hesaaco mehdipoor school 25-12-97
		Detailer:	
		Print Date:	16-03-2019
Job Number:	180	Page No:	1

Panel Label:	L17
Design Basics:	
Steel Design Code	AISI S100-12 LRFD
Loading Code:	IBC 2015 LRFD
Wind Speed	W49
Snow Slope Factor	1.0
Snow Adjustment Factor	1.0
Wall Location	External
Dead Load (G)	0.836 kN/m
Live Load (Q1 = max(Q2,Q3))	0.450 kN/m
Roof Live Load (Q2)	0.000 kN/m
Floor Live Load (Q3)	0.450 kN/m
Live Load (Q4 = Q2+Q3)	0.450 kN/m
Snow Load (S)	0.000 kN/m
Wind Up Load (Wu)	0.000 kN/m
Wind Down Load (Wd)	0.000 kN/m
Wind Horizontal Load (Wh)	1.501 kPa
Panel Self Weight	0.759 kN/m
Applied Point Load (P)	1.1 kN
Impact Load (P2)	0.7 kN
Load Case Results (single stu	Maximum Stud Spacing
1.2G + +1.6Q2 + 1.0Q3	9000 mm
1.2G + 0.5Q2 + 1.6Q3	9000 mm
1.2G + 1.0Q3 + 1.6S	9000 mm
1.2G + 1.6P1	9000 mm
1.2G + 0.5Q4 + 1.0Wh	547 mm
0.9G + 1.0Wu + 1.0Wh	547 mm
0.42Wh	576 mm
P2	933 mm
Design Results:	
Stud Material	89S41-095-350
Stud Spacing Type	Single Absolute
Nominal Wall Height	3410 mm
Nominal Noggin Spacing	1170 mm
Maximum Nominal Stud Spacing	600 mm
Actual Nominal Stud Spacing	600 mm
Stud Engineering Compliance	%
Manually Altered	Yes

Section Dimensions (single stud):	
Section Height	89 mm
Section Width	41 mm
Lip Length	11.50 mm
Inside Radius	2.00 mm
Material Thickness	0.95 mm
Yield Strength	350 MPa
Tensile Strength	420 MPa
Section Properties (single stud):	
Gross Area	176.653 mm^2
Section Mass	1.387 kg/m
Centroid Left	12.92 mm
Centroid Top	44.02 mm
Second Moment of Inertia Ix	224850 mm^4
Second Moment of Inertia Iy	41508 mm^4
Radius of Gyration rx	35.68 mm
Radius of Gyration ry	15.33 mm
Shear Centre x	32.60 mm
Shear Centre y	0.00 mm
Polar Gyration ro	50.91 mm
Torsion Constant J	53 mm^4
Warping Constant Cw	72.90 E06mm^6
Section Capacities (single stud):	
Shear Capacity ΦvVn	9.46 kN
Tension Capacity ΦtTn	51.85 kN
Compression Capacity ΦcPno	33.08 kN
Compression Capacity ΦcPn	15.86 kN
Bending Capacity ΦbMnxo-	1438.05 Nm
Bending Capacity ΦbMnx-	1248.69 Nm
Bending Capacity ΦbMnxo	1438.05 Nm
Bending Capacity ΦbMnx	1248.69 Nm

Stud Design for Panel 89

Company:	Framecad		
Project:	Layouts	Dwg Name:	Hesaaco mehdipoor school 25-12-97
		Detailer:	
		Print Date:	16-03-2019
Job Number:	180	Page No:	2

Stud Design for Panel L3

Company:	Framecad		
Project:	Layouts	Dwg Name:	Hesaaco mehdipoor school 25-12-97
		Detailer:	
		Print Date:	16-03-2019
Job Number:	180	Page No:	1

Panel Label:	L17
Design Basics:	
Steel Design Code	AISI S100-12 LRFD
Loading Code:	IBC 2015 LRFD
Wind Speed	W49
Snow Slope Factor	1.0
Snow Adjustment Factor	1.0
Wall Location	External
Dead Load (G)	1.526 kN/m
Live Load (Q1 = max(Q2,Q3))	0.990 kN/m
Roof Live Load (Q2)	0.000 kN/m
Floor Live Load (Q3)	0.990 kN/m
Live Load (Q4 = Q2+Q3)	0.990 kN/m
Snow Load (S)	0.000 kN/m
Wind Up Load (Wu)	0.000 kN/m
Wind Down Load (Wd)	0.000 kN/m
Wind Horizontal Load (Wh)	1.501 kPa
Panel Self Weight	0.759 kN/m
Applied Point Load (P)	1.1 kN
Impact Load (P2)	0.7 kN
Load Case Results (single stu	Maximum Stud Spacing
1.2G + +1.6Q2 + 1.0Q3	5621 mm
1.2G + 0.5Q2 + 1.6Q3	4643 mm
1.2G + 1.0Q3 + 1.6S	5621 mm
1.2G + 1.6P1	7697 mm
1.2G + 0.5Q4 + 1.0Wh	522 mm
0.9G + 1.0Wu + 1.0Wh	522 mm
0.42Wh	576 mm
P2	933 mm
Design Results:	
Stud Material	89S41-095-350
Stud Spacing Type	Single Absolute
Nominal Wall Height	3410 mm
Nominal Noggin Spacing	1170 mm
Maximum Nominal Stud Spacing	600 mm
Actual Nominal Stud Spacing	600 mm
Stud Engineering Compliance	%
Manually Altered	Yes

Section Dimensions (single stud):	
Section Height	89 mm
Section Width	41 mm
Lip Length	11.50 mm
Inside Radius	2.00 mm
Material Thickness	0.95 mm
Yield Strength	350 MPa
Tensile Strength	420 MPa
Section Properties (single stud):	
Gross Area	176.653 mm^2
Section Mass	1.387 kg/m
Centroid Left	12.92 mm
Centroid Top	44.02 mm
Second Moment of Inertia Ix	224850 mm^4
Second Moment of Inertia Iy	41508 mm^4
Radius of Gyration rx	35.68 mm
Radius of Gyration ry	15.33 mm
Shear Centre x	32.60 mm
Shear Centre y	0.00 mm
Polar Gyration ro	50.91 mm
Torsion Constant J	53 mm^4
Warping Constant Cw	72.90 E06mm^6
Section Capacities (single stud):	
Shear Capacity ΦvVn	9.46 kN
Tension Capacity ΦtTn	51.85 kN
Compression Capacity ΦcPno	33.08 kN
Compression Capacity ΦcPn	15.86 kN
Bending Capacity ΦbMnxo-	1438.05 Nm
Bending Capacity ΦbMnx-	1248.69 Nm
Bending Capacity ΦbMnxo	1438.05 Nm
Bending Capacity ΦbMnx	1248.69 Nm

Stud Design for Panel 89

Company:	Framecad		
Project:	Layouts	Dwg Name:	Hesaaco mehdipoor school 25-12-97
		Detailer:	
		Print Date:	16-03-2019
Job Number:	180	Page No:	2

Stud Design for Panel L4

Company:	Framecad		
Project:	Layouts	Dwg Name:	Hesaaco mehdipoor school 25-12-97
		Detailer:	
		Print Date:	16-03-2019
Job Number:	180	Page No:	1

Panel Label:	L17
Design Basics:	
Steel Design Code	AISI S100-12 LRFD
Loading Code:	IBC 2015 LRFD
Wind Speed	W49
Snow Slope Factor	1.0
Snow Adjustment Factor	1.0
Wall Location	External
Dead Load (G)	2.897 kN/m
Live Load (Q1 = max(Q2,Q3))	1.915 kN/m
Roof Live Load (Q2)	0.000 kN/m
Floor Live Load (Q3)	1.915 kN/m
Live Load (Q4 = Q2+Q3)	1.915 kN/m
Snow Load (S)	0.000 kN/m
Wind Up Load (Wu)	0.000 kN/m
Wind Down Load (Wd)	0.000 kN/m
Wind Horizontal Load (Wh)	1.501 kPa
Panel Self Weight	0.759 kN/m
Applied Point Load (P)	1.1 kN
Impact Load (P2)	0.7 kN
Load Case Results (single stu	Maximum Stud Spacing
1.2G + +1.6Q2 + 1.0Q3	2941 mm
1.2G + 0.5Q2 + 1.6Q3	2424 mm
1.2G + 1.0Q3 + 1.6S	2941 mm
1.2G + 1.6P1	4055 mm
1.2G + 0.5Q4 + 1.0Wh	472 mm
0.9G + 1.0Wu + 1.0Wh	522 mm
0.42Wh	576 mm
P2	933 mm
Design Results:	
Stud Material	89S41-095-350
Stud Spacing Type	Single Absolute
Nominal Wall Height	3410 mm
Nominal Noggin Spacing	1170 mm
Maximum Nominal Stud Spacing	600 mm
Actual Nominal Stud Spacing	600 mm
Stud Engineering Compliance	%
Manually Altered	Yes

Section Dimensions (single stud):	
Section Height	89 mm
Section Width	41 mm
Lip Length	11.50 mm
Inside Radius	2.00 mm
Material Thickness	0.95 mm
Yield Strength	350 MPa
Tensile Strength	420 MPa
Section Properties (single stud):	
Gross Area	176.653 mm^2
Section Mass	1.387 kg/m
Centroid Left	12.92 mm
Centroid Top	44.02 mm
Second Moment of Inertia Ix	224850 mm^4
Second Moment of Inertia Iy	41508 mm^4
Radius of Gyration rx	35.68 mm
Radius of Gyration ry	15.33 mm
Shear Centre x	32.60 mm
Shear Centre y	0.00 mm
Polar Gyration ro	50.91 mm
Torsion Constant J	53 mm^4
Warping Constant Cw	72.90 E06mm^6
Section Capacities (single stud):	
Shear Capacity ΦvVn	9.46 kN
Tension Capacity ΦtTn	51.85 kN
Compression Capacity ΦcPno	33.08 kN
Compression Capacity ΦcPn	15.86 kN
Bending Capacity ΦbMnxo-	1438.05 Nm
Bending Capacity ΦbMnx-	1248.69 Nm
Bending Capacity ΦbMnxo	1438.05 Nm
Bending Capacity ΦbMnx	1248.69 Nm

Stud Design for Panel 89

Company:	Framecad		
Project:	Layouts	Dwg Name:	Hesaaco mehdipoor school 25-12-97
		Detailer:	
		Print Date:	16-03-2019
Job Number:	180	Page No:	2

Stud Design for Panel L5

Company:	Framecad		
Project:	Layouts	Dwg Name:	Hesaaco mehdipoor school 25-12-97
		Detailer:	
		Print Date:	16-03-2019
Job Number:	180	Page No:	1

Panel Label:	L17
Design Basics:	
Steel Design Code	AISI S100-12 LRFD
Loading Code:	IBC 2015 LRFD
Wind Speed	W49
Snow Slope Factor	1.0
Snow Adjustment Factor	1.0
Wall Location	Internal
Dead Load (G)	0.000 kN/m
Live Load (Q1 = max(Q2,Q3))	0.000 kN/m
Roof Live Load (Q2)	0.000 kN/m
Floor Live Load (Q3)	0.000 kN/m
Live Load (Q4 = Q2+Q3)	0.000 kN/m
Snow Load (S)	0.000 kN/m
Wind Up Load (Wu)	0.000 kN/m
Wind Down Load (Wd)	0.000 kN/m
Wind Horizontal Load (Wh)	0.500 kPa
Panel Self Weight	0.759 kN/m
Applied Point Load (P)	1.1 kN
Impact Load (P2)	0.7 kN
Load Case Results (single stu	Maximum Stud Spacing
1.2G + +1.6Q2 + 1.0Q3	9000 mm
1.2G + 0.5Q2 + 1.6Q3	9000 mm
1.2G + 1.0Q3 + 1.6S	9000 mm
1.2G + 1.6P1	9000 mm
1.2G + 0.5Q4 + 1.0Wh	1717 mm
0.9G + 1.0Wu + 1.0Wh	1692 mm
0.42Wh	1727 mm
P2	933 mm
Design Results:	
Stud Material	89S41-095-350
Stud Spacing Type	Single Absolute
Nominal Wall Height	3410 mm
Nominal Noggin Spacing	1170 mm
Maximum Nominal Stud Spacing	600 mm
Actual Nominal Stud Spacing	600 mm
Stud Engineering Compliance	%
Manually Altered	Yes

Section Dimensions (single stud):	
Section Height	89 mm
Section Width	41 mm
Lip Length	11.50 mm
Inside Radius	2.00 mm
Material Thickness	0.95 mm
Yield Strength	350 MPa
Tensile Strength	420 MPa
Section Properties (single stud):	
Gross Area	176.653 mm^2
Section Mass	1.387 kg/m
Centroid Left	12.92 mm
Centroid Top	44.02 mm
Second Moment of Inertia Ix	224850 mm^4
Second Moment of Inertia Iy	41508 mm^4
Radius of Gyration rx	35.68 mm
Radius of Gyration ry	15.33 mm
Shear Centre x	32.60 mm
Shear Centre y	0.00 mm
Polar Gyration ro	50.91 mm
Torsion Constant J	53 mm^4
Warping Constant Cw	72.90 E06mm^6
Section Capacities (single stud):	
Shear Capacity ΦvVn	9.46 kN
Tension Capacity ΦtTn	51.85 kN
Compression Capacity ΦcPno	33.08 kN
Compression Capacity ΦcPn	15.86 kN
Bending Capacity ΦbMnxo-	1438.05 Nm
Bending Capacity ΦbMnx-	1248.69 Nm
Bending Capacity ΦbMnxo	1438.05 Nm
Bending Capacity ΦbMnx	1248.69 Nm

Stud Design for Panel 89

Company:	Framecad		
Project:	Layouts	Dwg Name:	Hesaaco mehdipoor school 25-12-97
		Detailer:	
		Print Date:	16-03-2019
Job Number:	180	Page No:	2

Stud Design for Panel L6

Company:	Framecad		
Project:	Layouts	Dwg Name:	Hesaaco mehdipoor school 25-12-97
		Detailer:	
		Print Date:	16-03-2019
Job Number:	180	Page No:	1

Panel Label:	L17
Design Basics:	
Steel Design Code	AISI S100-12 LRFD
Loading Code:	IBC 2015 LRFD
Wind Speed	W49
Snow Slope Factor	1.0
Snow Adjustment Factor	1.0
Wall Location	External
Dead Load (G)	3.025 kN/m
Live Load (Q1 = max(Q2,Q3))	2.007 kN/m
Roof Live Load (Q2)	0.000 kN/m
Floor Live Load (Q3)	2.007 kN/m
Live Load (Q4 = Q2+Q3)	2.007 kN/m
Snow Load (S)	0.000 kN/m
Wind Up Load (Wu)	0.000 kN/m
Wind Down Load (Wd)	0.000 kN/m
Wind Horizontal Load (Wh)	1.501 kPa
Panel Self Weight	0.759 kN/m
Applied Point Load (P)	1.1 kN
Impact Load (P2)	0.7 kN

Load Case Results (single stu	Maximum Stud Spacing
1.2G + +1.6Q2 + 1.0Q3	2813 mm
1.2G + 0.5Q2 + 1.6Q3	2318 mm
1.2G + 1.0Q3 + 1.6S	2813 mm
1.2G + 1.6P1	3883 mm
1.2G + 0.5Q4 + 1.0Wh	522 mm
0.9G + 1.0Wu + 1.0Wh	497 mm
0.42Wh	576 mm
P2	933 mm

Design Results:	
Stud Material	89S41-095-350
Stud Spacing Type	Single Absolute
Nominal Wall Height	3410 mm
Nominal Noggin Spacing	1170 mm
Maximum Nominal Stud Spacing	600 mm
Actual Nominal Stud Spacing	600 mm
Stud Engineering Compliance	%
Manually Altered	Yes

Section Dimensions (single stud):	
Section Height	89 mm
Section Width	41 mm
Lip Length	11.50 mm
Inside Radius	2.00 mm
Material Thickness	0.95 mm
Yield Strength	350 MPa
Tensile Strength	420 MPa
Section Properties (single stud):	
Gross Area	176.653 mm^2
Section Mass	1.387 kg/m
Centroid Left	12.92 mm
Centroid Top	44.02 mm
Second Moment of Inertia Ix	224850 mm^4
Second Moment of Inertia Iy	41508 mm^4
Radius of Gyration rx	35.68 mm
Radius of Gyration ry	15.33 mm
Shear Centre x	32.60 mm
Shear Centre y	0.00 mm
Polar Gyration ro	50.91 mm
Torsion Constant J	53 mm^4
Warping Constant Cw	72.90 E06mm^6
Section Capacities (single stud):	
Shear Capacity ΦvVn	9.46 kN
Tension Capacity ΦtTn	51.85 kN
Compression Capacity ΦcPno	33.08 kN
Compression Capacity ΦcPn	15.86 kN
Bending Capacity ΦbMnxo-	1438.05 Nm
Bending Capacity ΦbMnx-	1248.69 Nm
Bending Capacity ΦbMnxo	1438.05 Nm
Bending Capacity ΦbMnx	1248.69 Nm

Stud Design for Panel 89

Company:	Framecad		
Project:	Layouts	Dwg Name:	Hesaaco mehdipoor school 25-12-97
		Detailer:	
		Print Date:	16-03-2019
Job Number:	180	Page No:	2

Stud Design for Panel L7

Company:	Framecad		
Project:	Layouts	Dwg Name:	Hesaaco mehdipoor school 25-12-97
		Detailer:	
		Print Date:	16-03-2019
Job Number:	180	Page No:	1

Panel Label:	L17
Design Basics:	
Steel Design Code	AISI S100-12 LRFD
Loading Code:	IBC 2015 LRFD
Wind Speed	W49
Snow Slope Factor	1.0
Snow Adjustment Factor	1.0
Wall Location	Internal
Dead Load (G)	0.000 kN/m
Live Load (Q1 = max(Q2,Q3))	0.000 kN/m
Roof Live Load (Q2)	0.000 kN/m
Floor Live Load (Q3)	0.000 kN/m
Live Load (Q4 = Q2+Q3)	0.000 kN/m
Snow Load (S)	0.000 kN/m
Wind Up Load (Wu)	0.000 kN/m
Wind Down Load (Wd)	0.000 kN/m
Wind Horizontal Load (Wh)	0.500 kPa
Panel Self Weight	0.759 kN/m
Applied Point Load (P)	1.1 kN
Impact Load (P2)	0.7 kN
Load Case Results (single stu	Maximum Stud Spacing
1.2G + +1.6Q2 + 1.0Q3	9000 mm
1.2G + 0.5Q2 + 1.6Q3	9000 mm
1.2G + 1.0Q3 + 1.6S	9000 mm
1.2G + 1.6P1	9000 mm
1.2G + 0.5Q4 + 1.0Wh	1717 mm
0.9G + 1.0Wu + 1.0Wh	1692 mm
0.42Wh	1727 mm
P2	933 mm
Design Results:	
Stud Material	89S41-095-350
Stud Spacing Type	Single Absolute
Nominal Wall Height	3410 mm
Nominal Noggin Spacing	1170 mm
Maximum Nominal Stud Spacing	600 mm
Actual Nominal Stud Spacing	600 mm
Stud Engineering Compliance	%
Manually Altered	Yes

Section Dimensions (single stud):	
Section Height	89 mm
Section Width	41 mm
Lip Length	11.50 mm
Inside Radius	2.00 mm
Material Thickness	0.95 mm
Yield Strength	350 MPa
Tensile Strength	420 MPa
Section Properties (single stud):	
Gross Area	176.653 mm^2
Section Mass	1.387 kg/m
Centroid Left	12.92 mm
Centroid Top	44.02 mm
Second Moment of Inertia Ix	224850 mm^4
Second Moment of Inertia Iy	41508 mm^4
Radius of Gyration rx	35.68 mm
Radius of Gyration ry	15.33 mm
Shear Centre x	32.60 mm
Shear Centre y	0.00 mm
Polar Gyration ro	50.91 mm
Torsion Constant J	53 mm^4
Warping Constant Cw	72.90 E06mm^6
Section Capacities (single stud):	
Shear Capacity ΦvVn	9.46 kN
Tension Capacity ΦtTn	51.85 kN
Compression Capacity ΦcPno	33.08 kN
Compression Capacity ΦcPn	15.86 kN
Bending Capacity ΦbMnxo-	1438.05 Nm
Bending Capacity ΦbMnx-	1248.69 Nm
Bending Capacity ΦbMnxo	1438.05 Nm
Bending Capacity ΦbMnx	1248.69 Nm

Stud Design for Panel 89

Company:	Framecad		
Project:	Layouts	Dwg Name:	Hesaaco mehdipoor school 25-12-97
		Detailer:	
		Print Date:	16-03-2019
Job Number:	180	Page No:	2

Stud Design for Panel L8

Company:	Framecad		
Project:	Layouts	Dwg Name:	Hesaaco mehdipoor school 25-12-97
		Detailer:	
		Print Date:	16-03-2019
Job Number:	180	Page No:	1

Panel Label:	L17
Design Basics:	
Steel Design Code	AISI S100-12 LRFD
Loading Code:	IBC 2015 LRFD
Wind Speed	W49
Snow Slope Factor	1.0
Snow Adjustment Factor	1.0
Wall Location	External
Dead Load (G)	3.064 kN/m
Live Load (Q1 = max(Q2,Q3))	2.025 kN/m
Roof Live Load (Q2)	0.000 kN/m
Floor Live Load (Q3)	2.025 kN/m
Live Load (Q4 = Q2+Q3)	2.025 kN/m
Snow Load (S)	0.000 kN/m
Wind Up Load (Wu)	0.000 kN/m
Wind Down Load (Wd)	0.000 kN/m
Wind Horizontal Load (Wh)	1.501 kPa
Panel Self Weight	0.759 kN/m
Applied Point Load (P)	1.1 kN
Impact Load (P2)	0.7 kN
Load Case Results (single stu	Maximum Stud Spacing
1.2G + +1.6Q2 + 1.0Q3	2781 mm
1.2G + 0.5Q2 + 1.6Q3	2292 mm
1.2G + 1.0Q3 + 1.6S	2781 mm
1.2G + 1.6P1	3834 mm
1.2G + 0.5Q4 + 1.0Wh	522 mm
0.9G + 1.0Wu + 1.0Wh	497 mm
0.42Wh	576 mm
P2	933 mm
Design Results:	
Stud Material	89S41-095-350
Stud Spacing Type	Single Absolute
Nominal Wall Height	3410 mm
Nominal Noggin Spacing	1170 mm
Maximum Nominal Stud Spacing	600 mm
Actual Nominal Stud Spacing	600 mm
Stud Engineering Compliance	%
Manually Altered	Yes

Section Dimensions (single stud):	
Section Height	89 mm
Section Width	41 mm
Lip Length	11.50 mm
Inside Radius	2.00 mm
Material Thickness	0.95 mm
Yield Strength	350 MPa
Tensile Strength	420 MPa
Section Properties (single stud):	
Gross Area	176.653 mm^2
Section Mass	1.387 kg/m
Centroid Left	12.92 mm
Centroid Top	44.02 mm
Second Moment of Inertia Ix	224850 mm^4
Second Moment of Inertia Iy	41508 mm^4
Radius of Gyration rx	35.68 mm
Radius of Gyration ry	15.33 mm
Shear Centre x	32.60 mm
Shear Centre y	0.00 mm
Polar Gyration ro	50.91 mm
Torsion Constant J	53 mm^4
Warping Constant Cw	72.90 E06mm^6
Section Capacities (single stud):	
Shear Capacity ΦvVn	9.46 kN
Tension Capacity ΦtTn	51.85 kN
Compression Capacity ΦcPno	33.08 kN
Compression Capacity ΦcPn	15.86 kN
Bending Capacity ΦbMnxo-	1438.05 Nm
Bending Capacity ΦbMnx-	1248.69 Nm
Bending Capacity ΦbMnxo	1438.05 Nm
Bending Capacity ΦbMnx	1248.69 Nm

Stud Design for Panel 89

Company:	Framecad		
Project:	Layouts	Dwg Name:	Hesaaco mehdipoor school 25-12-97
		Detailer:	
		Print Date:	16-03-2019
Job Number:	180	Page No:	2

Stud Design for Panel L9

Company:	Framecad		
Project:	Layouts	Dwg Name:	Hesaaco mehdipoor school 25-12-97
		Detailer:	
		Print Date:	16-03-2019
Job Number:	180	Page No:	1

Panel Label:	L17
Design Basics:	
Steel Design Code	AISI S100-12 LRFD
Loading Code:	IBC 2015 LRFD
Wind Speed	W49
Snow Slope Factor	1.0
Snow Adjustment Factor	1.0
Wall Location	External
Dead Load (G)	2.488 kN/m
Live Load (Q1 = max(Q2,Q3))	1.644 kN/m
Roof Live Load (Q2)	0.000 kN/m
Floor Live Load (Q3)	1.644 kN/m
Live Load (Q4 = Q2+Q3)	1.644 kN/m
Snow Load (S)	0.000 kN/m
Wind Up Load (Wu)	0.000 kN/m
Wind Down Load (Wd)	0.000 kN/m
Wind Horizontal Load (Wh)	1.501 kPa
Panel Self Weight	0.759 kN/m
Applied Point Load (P)	1.1 kN
Impact Load (P2)	0.7 kN
Load Case Results (single stu	Maximum Stud Spacing
1.2G + +1.6Q2 + 1.0Q3	3425 mm
1.2G + 0.5Q2 + 1.6Q3	2823 mm
1.2G + 1.0Q3 + 1.6S	3425 mm
1.2G + 1.6P1	4722 mm
1.2G + 0.5Q4 + 1.0Wh	497 mm
0.9G + 1.0Wu + 1.0Wh	522 mm
0.42Wh	576 mm
P2	933 mm
Design Results:	
Stud Material	89S41-095-350
Stud Spacing Type	Single Absolute
Nominal Wall Height	3410 mm
Nominal Noggin Spacing	1170 mm
Maximum Nominal Stud Spacing	600 mm
Actual Nominal Stud Spacing	600 mm
Stud Engineering Compliance	%
Manually Altered	Yes

Section Dimensions (single stud):	
Section Height	89 mm
Section Width	41 mm
Lip Length	11.50 mm
Inside Radius	2.00 mm
Material Thickness	0.95 mm
Yield Strength	350 MPa
Tensile Strength	420 MPa
Section Properties (single stud):	
Gross Area	176.653 mm^2
Section Mass	1.387 kg/m
Centroid Left	12.92 mm
Centroid Top	44.02 mm
Second Moment of Inertia Ix	224850 mm^4
Second Moment of Inertia Iy	41508 mm^4
Radius of Gyration rx	35.68 mm
Radius of Gyration ry	15.33 mm
Shear Centre x	32.60 mm
Shear Centre y	0.00 mm
Polar Gyration ro	50.91 mm
Torsion Constant J	53 mm^4
Warping Constant Cw	72.90 E06mm^6
Section Capacities (single stud):	
Shear Capacity ΦvVn	9.46 kN
Tension Capacity ΦtTn	51.85 kN
Compression Capacity ΦcPno	33.08 kN
Compression Capacity ΦcPn	15.86 kN
Bending Capacity ΦbMnxo-	1438.05 Nm
Bending Capacity ΦbMnx-	1248.69 Nm
Bending Capacity ΦbMnxo	1438.05 Nm
Bending Capacity ΦbMnx	1248.69 Nm

Stud Design for Panel 89

Company:	Framecad		
Project:	Layouts	Dwg Name:	Hesaaco mehdipoor school 25-12-97
		Detailer:	
		Print Date:	16-03-2019
Job Number:	180	Page No:	2

Stud Design for Panel L10

Company:	Framecad		
Project:	Layouts	Dwg Name:	Hesaaco mehdipoor school 25-12-97
		Detailer:	
		Print Date:	16-03-2019
Job Number:	180	Page No:	1

Panel Label:	L17
Design Basics:	
Steel Design Code	AISI S100-12 LRFD
Loading Code:	IBC 2015 LRFD
Wind Speed	W49
Snow Slope Factor	1.0
Snow Adjustment Factor	1.0
Wall Location	Internal
Dead Load (G)	0.000 kN/m
Live Load (Q1 = max(Q2,Q3))	0.000 kN/m
Roof Live Load (Q2)	0.000 kN/m
Floor Live Load (Q3)	0.000 kN/m
Live Load (Q4 = Q2+Q3)	0.000 kN/m
Snow Load (S)	0.000 kN/m
Wind Up Load (Wu)	0.000 kN/m
Wind Down Load (Wd)	0.000 kN/m
Wind Horizontal Load (Wh)	0.500 kPa
Panel Self Weight	0.759 kN/m
Applied Point Load (P)	1.1 kN
Impact Load (P2)	0.7 kN
Load Case Results (single stu	Maximum Stud Spacing
1.2G + +1.6Q2 + 1.0Q3	9000 mm
1.2G + 0.5Q2 + 1.6Q3	9000 mm
1.2G + 1.0Q3 + 1.6S	9000 mm
1.2G + 1.6P1	9000 mm
1.2G + 0.5Q4 + 1.0Wh	1717 mm
0.9G + 1.0Wu + 1.0Wh	1692 mm
0.42Wh	1727 mm
P2	933 mm
Design Results:	
Stud Material	89S41-095-350
Stud Spacing Type	Single Absolute
Nominal Wall Height	3410 mm
Nominal Noggin Spacing	1170 mm
Maximum Nominal Stud Spacing	600 mm
Actual Nominal Stud Spacing	600 mm
Stud Engineering Compliance	%
Manually Altered	Yes

Section Dimensions (single stud):	
Section Height	89 mm
Section Width	41 mm
Lip Length	11.50 mm
Inside Radius	2.00 mm
Material Thickness	0.95 mm
Yield Strength	350 MPa
Tensile Strength	420 MPa
Section Properties (single stud):	
Gross Area	176.653 mm^2
Section Mass	1.387 kg/m
Centroid Left	12.92 mm
Centroid Top	44.02 mm
Second Moment of Inertia Ix	224850 mm^4
Second Moment of Inertia Iy	41508 mm^4
Radius of Gyration rx	35.68 mm
Radius of Gyration ry	15.33 mm
Shear Centre x	32.60 mm
Shear Centre y	0.00 mm
Polar Gyration ro	50.91 mm
Torsion Constant J	53 mm^4
Warping Constant Cw	72.90 E06mm^6
Section Capacities (single stud):	
Shear Capacity ΦvVn	9.46 kN
Tension Capacity ΦtTn	51.85 kN
Compression Capacity ΦcPno	33.08 kN
Compression Capacity ΦcPn	15.86 kN
Bending Capacity ΦbMnxo-	1438.05 Nm
Bending Capacity ΦbMnx-	1248.69 Nm
Bending Capacity ΦbMnxo	1438.05 Nm
Bending Capacity ΦbMnx	1248.69 Nm

Stud Design for Panel 89

Company:	Framecad		
Project:	Layouts	Dwg Name:	Hesaaco mehdipoor school 25-12-97
		Detailer:	
		Print Date:	16-03-2019
Job Number:	180	Page No:	2

Stud Design for Panel L11

Company:	Framecad		
Project:	Layouts	Dwg Name:	Hesaaco mehdipoor school 25-12-97
		Detailer:	
		Print Date:	16-03-2019
Job Number:	180	Page No:	1

Panel Label:	L17
Design Basics:	
Steel Design Code	AISI S100-12 LRFD
Loading Code:	IBC 2015 LRFD
Wind Speed	W49
Snow Slope Factor	1.0
Snow Adjustment Factor	1.0
Wall Location	External
Dead Load (G)	3.025 kN/m
Live Load (Q1 = max(Q2,Q3))	2.007 kN/m
Roof Live Load (Q2)	0.000 kN/m
Floor Live Load (Q3)	2.007 kN/m
Live Load (Q4 = Q2+Q3)	2.007 kN/m
Snow Load (S)	0.000 kN/m
Wind Up Load (Wu)	0.000 kN/m
Wind Down Load (Wd)	0.000 kN/m
Wind Horizontal Load (Wh)	1.501 kPa
Panel Self Weight	0.759 kN/m
Applied Point Load (P)	1.1 kN
Impact Load (P2)	0.7 kN
Load Case Results (single stu	Maximum Stud Spacing
1.2G + +1.6Q2 + 1.0Q3	2813 mm
1.2G + 0.5Q2 + 1.6Q3	2318 mm
1.2G + 1.0Q3 + 1.6S	2813 mm
1.2G + 1.6P1	3883 mm
1.2G + 0.5Q4 + 1.0Wh	522 mm
0.9G + 1.0Wu + 1.0Wh	497 mm
0.42Wh	576 mm
P2	933 mm
Design Results:	
Stud Material	89S41-095-350
Stud Spacing Type	Single Absolute
Nominal Wall Height	3410 mm
Nominal Noggin Spacing	1170 mm
Maximum Nominal Stud Spacing	600 mm
Actual Nominal Stud Spacing	600 mm
Stud Engineering Compliance	%
Manually Altered	Yes

Section Dimensions (single stud):	
Section Height	89 mm
Section Width	41 mm
Lip Length	11.50 mm
Inside Radius	2.00 mm
Material Thickness	0.95 mm
Yield Strength	350 MPa
Tensile Strength	420 MPa
Section Properties (single stud):	
Gross Area	176.653 mm^2
Section Mass	1.387 kg/m
Centroid Left	12.92 mm
Centroid Top	44.02 mm
Second Moment of Inertia Ix	224850 mm^4
Second Moment of Inertia Iy	41508 mm^4
Radius of Gyration rx	35.68 mm
Radius of Gyration ry	15.33 mm
Shear Centre x	32.60 mm
Shear Centre y	0.00 mm
Polar Gyration ro	50.91 mm
Torsion Constant J	53 mm^4
Warping Constant Cw	72.90 E06mm^6
Section Capacities (single stud):	
Shear Capacity ΦvVn	9.46 kN
Tension Capacity ΦtTn	51.85 kN
Compression Capacity ΦcPno	33.08 kN
Compression Capacity ΦcPn	15.86 kN
Bending Capacity ΦbMnxo-	1438.05 Nm
Bending Capacity ΦbMnx-	1248.69 Nm
Bending Capacity ΦbMnxo	1438.05 Nm
Bending Capacity ΦbMnx	1248.69 Nm

Stud Design for Panel 89

Company:	Framecad		
Project:	Layouts	Dwg Name:	Hesaaco mehdipoor school 25-12-97
		Detailer:	
		Print Date:	16-03-2019
Job Number:	180	Page No:	2

Stud Design for Panel L12

Company:	Framecad		
Project:	Layouts	Dwg Name:	Hesaaco mehdipoor school 25-12-97
		Detailer:	
		Print Date:	16-03-2019
Job Number:	180	Page No:	1

Panel Label:	L17
Design Basics:	
Steel Design Code	AISI S100-12 LRFD
Loading Code:	IBC 2015 LRFD
Wind Speed	W49
Snow Slope Factor	1.0
Snow Adjustment Factor	1.0
Wall Location	Internal
Dead Load (G)	0.000 kN/m
Live Load (Q1 = max(Q2,Q3))	0.000 kN/m
Roof Live Load (Q2)	0.000 kN/m
Floor Live Load (Q3)	0.000 kN/m
Live Load (Q4 = Q2+Q3)	0.000 kN/m
Snow Load (S)	0.000 kN/m
Wind Up Load (Wu)	0.000 kN/m
Wind Down Load (Wd)	0.000 kN/m
Wind Horizontal Load (Wh)	0.500 kPa
Panel Self Weight	0.759 kN/m
Applied Point Load (P)	1.1 kN
Impact Load (P2)	0.7 kN
Load Case Results (single stu	Maximum Stud Spacing
1.2G + +1.6Q2 + 1.0Q3	9000 mm
1.2G + 0.5Q2 + 1.6Q3	9000 mm
1.2G + 1.0Q3 + 1.6S	9000 mm
1.2G + 1.6P1	9000 mm
1.2G + 0.5Q4 + 1.0Wh	1717 mm
0.9G + 1.0Wu + 1.0Wh	1692 mm
0.42Wh	1727 mm
P2	933 mm
Design Results:	
Stud Material	89S41-095-350
Stud Spacing Type	Single Absolute
Nominal Wall Height	3410 mm
Nominal Noggin Spacing	1170 mm
Maximum Nominal Stud Spacing	600 mm
Actual Nominal Stud Spacing	600 mm
Stud Engineering Compliance	%
Manually Altered	Yes

Section Dimensions (single stud):	
Section Height	89 mm
Section Width	41 mm
Lip Length	11.50 mm
Inside Radius	2.00 mm
Material Thickness	0.95 mm
Yield Strength	350 MPa
Tensile Strength	420 MPa
Section Properties (single stud):	
Gross Area	176.653 mm^2
Section Mass	1.387 kg/m
Centroid Left	12.92 mm
Centroid Top	44.02 mm
Second Moment of Inertia Ix	224850 mm^4
Second Moment of Inertia Iy	41508 mm^4
Radius of Gyration rx	35.68 mm
Radius of Gyration ry	15.33 mm
Shear Centre x	32.60 mm
Shear Centre y	0.00 mm
Polar Gyration ro	50.91 mm
Torsion Constant J	53 mm^4
Warping Constant Cw	72.90 E06mm^6
Section Capacities (single stud):	
Shear Capacity ΦvVn	9.46 kN
Tension Capacity ΦtTn	51.85 kN
Compression Capacity ΦcPno	33.08 kN
Compression Capacity ΦcPn	15.86 kN
Bending Capacity ΦbMnxo-	1438.05 Nm
Bending Capacity ΦbMnx-	1248.69 Nm
Bending Capacity ΦbMnxo	1438.05 Nm
Bending Capacity ΦbMnx	1248.69 Nm

Stud Design for Panel 89

Company:	Framecad		
Project:	Layouts	Dwg Name:	Hesaaco mehdipoor school 25-12-97
		Detailer:	
		Print Date:	16-03-2019
Job Number:	180	Page No:	2

Stud Design for Panel L13

Company:	Framecad		
Project:	Layouts	Dwg Name:	Hesaaco mehdipoor school 25-12-97
		Detailer:	
		Print Date:	16-03-2019
Job Number:	180	Page No:	1

Panel Label:	L17
Design Basics:	
Steel Design Code	AISI S100-12 LRFD
Loading Code:	IBC 2015 LRFD
Wind Speed	W49
Snow Slope Factor	1.0
Snow Adjustment Factor	1.0
Wall Location	External
Dead Load (G)	2.911 kN/m
Live Load (Q1 = max(Q2,Q3))	1.911 kN/m
Roof Live Load (Q2)	0.000 kN/m
Floor Live Load (Q3)	1.911 kN/m
Live Load (Q4 = Q2+Q3)	1.911 kN/m
Snow Load (S)	0.000 kN/m
Wind Up Load (Wu)	0.000 kN/m
Wind Down Load (Wd)	0.000 kN/m
Wind Horizontal Load (Wh)	1.501 kPa
Panel Self Weight	0.759 kN/m
Applied Point Load (P)	1.1 kN
Impact Load (P2)	0.7 kN
Load Case Results (single stu	Maximum Stud Spacing
1.2G + +1.6Q2 + 1.0Q3	2934 mm
1.2G + 0.5Q2 + 1.6Q3	2421 mm
1.2G + 1.0Q3 + 1.6S	2934 mm
1.2G + 1.6P1	4036 mm
1.2G + 0.5Q4 + 1.0Wh	472 mm
0.9G + 1.0Wu + 1.0Wh	522 mm
0.42Wh	576 mm
P2	933 mm
Design Results:	
Stud Material	89S41-095-350
Stud Spacing Type	Single Absolute
Nominal Wall Height	3410 mm
Nominal Noggin Spacing	1170 mm
Maximum Nominal Stud Spacing	600 mm
Actual Nominal Stud Spacing	600 mm
Stud Engineering Compliance	%
Manually Altered	Yes

Section Dimensions (single stud):	
Section Height	89 mm
Section Width	41 mm
Lip Length	11.50 mm
Inside Radius	2.00 mm
Material Thickness	0.95 mm
Yield Strength	350 MPa
Tensile Strength	420 MPa
Section Properties (single stud):	
Gross Area	176.653 mm^2
Section Mass	1.387 kg/m
Centroid Left	12.92 mm
Centroid Top	44.02 mm
Second Moment of Inertia Ix	224850 mm^4
Second Moment of Inertia Iy	41508 mm^4
Radius of Gyration rx	35.68 mm
Radius of Gyration ry	15.33 mm
Shear Centre x	32.60 mm
Shear Centre y	0.00 mm
Polar Gyration ro	50.91 mm
Torsion Constant J	53 mm^4
Warping Constant Cw	72.90 E06mm^6
Section Capacities (single stud):	
Shear Capacity ΦvVn	9.46 kN
Tension Capacity ΦtTn	51.85 kN
Compression Capacity ΦcPno	33.08 kN
Compression Capacity ΦcPn	15.86 kN
Bending Capacity ΦbMnxo-	1438.05 Nm
Bending Capacity ΦbMnx-	1248.69 Nm
Bending Capacity ΦbMnxo	1438.05 Nm
Bending Capacity ΦbMnx	1248.69 Nm

Stud Design for Panel 89

Company:	Framecad		
Project:	Layouts	Dwg Name:	Hesaaco mehdipoor school 25-12-97
		Detailer:	
		Print Date:	16-03-2019
Job Number:	180	Page No:	2

Stud Design for Panel L14

Company:	Framecad		
Project:	Layouts	Dwg Name:	Hesaaco mehdipoor school 25-12-97
		Detailer:	
		Print Date:	16-03-2019
Job Number:	180	Page No:	1

Panel Label:	L17
Design Basics:	
Steel Design Code	AISI S100-12 LRFD
Loading Code:	IBC 2015 LRFD
Wind Speed	W49
Snow Slope Factor	1.0
Snow Adjustment Factor	1.0
Wall Location	External
Dead Load (G)	0.836 kN/m
Live Load (Q1 = max(Q2,Q3))	0.450 kN/m
Roof Live Load (Q2)	0.000 kN/m
Floor Live Load (Q3)	0.450 kN/m
Live Load (Q4 = Q2+Q3)	0.450 kN/m
Snow Load (S)	0.000 kN/m
Wind Up Load (Wu)	0.000 kN/m
Wind Down Load (Wd)	0.000 kN/m
Wind Horizontal Load (Wh)	1.501 kPa
Panel Self Weight	0.759 kN/m
Applied Point Load (P)	1.1 kN
Impact Load (P2)	0.7 kN
Load Case Results (single stu	Maximum Stud Spacing
1.2G + +1.6Q2 + 1.0Q3	9000 mm
1.2G + 0.5Q2 + 1.6Q3	9000 mm
1.2G + 1.0Q3 + 1.6S	9000 mm
1.2G + 1.6P1	9000 mm
1.2G + 0.5Q4 + 1.0Wh	547 mm
0.9G + 1.0Wu + 1.0Wh	547 mm
0.42Wh	576 mm
P2	933 mm
Design Results:	
Stud Material	89S41-095-350
Stud Spacing Type	Single Absolute
Nominal Wall Height	3410 mm
Nominal Noggin Spacing	1170 mm
Maximum Nominal Stud Spacing	600 mm
Actual Nominal Stud Spacing	600 mm
Stud Engineering Compliance	%
Manually Altered	Yes

Section Dimensions (single stud):	
Section Height	89 mm
Section Width	41 mm
Lip Length	11.50 mm
Inside Radius	2.00 mm
Material Thickness	0.95 mm
Yield Strength	350 MPa
Tensile Strength	420 MPa
Section Properties (single stud):	
Gross Area	176.653 mm^2
Section Mass	1.387 kg/m
Centroid Left	12.92 mm
Centroid Top	44.02 mm
Second Moment of Inertia Ix	224850 mm^4
Second Moment of Inertia Iy	41508 mm^4
Radius of Gyration rx	35.68 mm
Radius of Gyration ry	15.33 mm
Shear Centre x	32.60 mm
Shear Centre y	0.00 mm
Polar Gyration ro	50.91 mm
Torsion Constant J	53 mm^4
Warping Constant Cw	72.90 E06mm^6
Section Capacities (single stud):	
Shear Capacity ΦvVn	9.46 kN
Tension Capacity ΦtTn	51.85 kN
Compression Capacity ΦcPno	33.08 kN
Compression Capacity ΦcPn	15.86 kN
Bending Capacity ΦbMnxo-	1438.05 Nm
Bending Capacity ΦbMnx-	1248.69 Nm
Bending Capacity ΦbMnxo	1438.05 Nm
Bending Capacity ΦbMnx	1248.69 Nm

Stud Design for Panel 89

Company:	Framecad		
Project:	Layouts	Dwg Name:	Hesaaco mehdipoor school 25-12-97
		Detailer:	
		Print Date:	16-03-2019
Job Number:	180	Page No:	2

Stud Design for Panel L15

Company:	Framecad		
Project:	Layouts	Dwg Name:	Hesaaco mehdipoor school 25-12-97
		Detailer:	
		Print Date:	16-03-2019
Job Number:	180	Page No:	1

Panel Label:	L17
Design Basics:	
Steel Design Code	AISI S100-12 LRFD
Loading Code:	IBC 2015 LRFD
Wind Speed	W49
Snow Slope Factor	1.0
Snow Adjustment Factor	1.0
Wall Location	External
Dead Load (G)	2.595 kN/m
Live Load (Q1 = max(Q2,Q3))	1.713 kN/m
Roof Live Load (Q2)	0.000 kN/m
Floor Live Load (Q3)	1.713 kN/m
Live Load (Q4 = Q2+Q3)	1.713 kN/m
Snow Load (S)	0.000 kN/m
Wind Up Load (Wu)	0.000 kN/m
Wind Down Load (Wd)	0.000 kN/m
Wind Horizontal Load (Wh)	1.501 kPa
Panel Self Weight	0.759 kN/m
Applied Point Load (P)	1.1 kN
Impact Load (P2)	0.7 kN
Load Case Results (single stu	Maximum Stud Spacing
1.2G + +1.6Q2 + 1.0Q3	3285 mm
1.2G + 0.5Q2 + 1.6Q3	2708 mm
1.2G + 1.0Q3 + 1.6S	3285 mm
1.2G + 1.6P1	4526 mm
1.2G + 0.5Q4 + 1.0Wh	497 mm
0.9G + 1.0Wu + 1.0Wh	522 mm
0.42Wh	576 mm
P2	933 mm
Design Results:	
Stud Material	89S41-095-350
Stud Spacing Type	Single Absolute
Nominal Wall Height	3410 mm
Nominal Noggin Spacing	1170 mm
Maximum Nominal Stud Spacing	600 mm
Actual Nominal Stud Spacing	600 mm
Stud Engineering Compliance	%
Manually Altered	Yes

Section Dimensions (single stud):	
Section Height	89 mm
Section Width	41 mm
Lip Length	11.50 mm
Inside Radius	2.00 mm
Material Thickness	0.95 mm
Yield Strength	350 MPa
Tensile Strength	420 MPa
Section Properties (single stud):	
Gross Area	176.653 mm^2
Section Mass	1.387 kg/m
Centroid Left	12.92 mm
Centroid Top	44.02 mm
Second Moment of Inertia Ix	224850 mm^4
Second Moment of Inertia Iy	41508 mm^4
Radius of Gyration rx	35.68 mm
Radius of Gyration ry	15.33 mm
Shear Centre x	32.60 mm
Shear Centre y	0.00 mm
Polar Gyration ro	50.91 mm
Torsion Constant J	53 mm^4
Warping Constant Cw	72.90 E06mm^6
Section Capacities (single stud):	
Shear Capacity ΦvVn	9.46 kN
Tension Capacity ΦtTn	51.85 kN
Compression Capacity ΦcPno	33.08 kN
Compression Capacity ΦcPn	15.86 kN
Bending Capacity ΦbMnxo-	1438.05 Nm
Bending Capacity ΦbMnx-	1248.69 Nm
Bending Capacity ΦbMnxo	1438.05 Nm
Bending Capacity ΦbMnx	1248.69 Nm

Stud Design for Panel 89

Company:	Framecad		
Project:	Layouts	Dwg Name:	Hesaaco mehdipoor school 25-12-97
		Detailer:	
		Print Date:	16-03-2019
Job Number:	180	Page No:	2

Stud Design for Panel L16

Company:	Framecad		
Project:	Layouts	Dwg Name:	Hesaaco mehdipoor school 25-12-97
		Detailer:	
		Print Date:	16-03-2019
Job Number:	180	Page No:	1

Panel Label:	L17
Design Basics:	
Steel Design Code	AISI S100-12 LRFD
Loading Code:	IBC 2015 LRFD
Wind Speed	W49
Snow Slope Factor	1.0
Snow Adjustment Factor	1.0
Wall Location	External
Dead Load (G)	2.897 kN/m
Live Load (Q1 = max(Q2,Q3))	1.914 kN/m
Roof Live Load (Q2)	0.000 kN/m
Floor Live Load (Q3)	1.914 kN/m
Live Load (Q4 = Q2+Q3)	1.914 kN/m
Snow Load (S)	0.000 kN/m
Wind Up Load (Wu)	0.000 kN/m
Wind Down Load (Wd)	0.000 kN/m
Wind Horizontal Load (Wh)	1.501 kPa
Panel Self Weight	0.759 kN/m
Applied Point Load (P)	1.1 kN
Impact Load (P2)	0.7 kN
Load Case Results (single stu	Maximum Stud Spacing
1.2G + +1.6Q2 + 1.0Q3	2942 mm
1.2G + 0.5Q2 + 1.6Q3	2425 mm
1.2G + 1.0Q3 + 1.6S	2942 mm
1.2G + 1.6P1	4055 mm
1.2G + 0.5Q4 + 1.0Wh	472 mm
0.9G + 1.0Wu + 1.0Wh	522 mm
0.42Wh	576 mm
P2	933 mm
Design Results:	
Stud Material	89S41-095-350
Stud Spacing Type	Single Absolute
Nominal Wall Height	3410 mm
Nominal Noggin Spacing	1170 mm
Maximum Nominal Stud Spacing	600 mm
Actual Nominal Stud Spacing	600 mm
Stud Engineering Compliance	%
Manually Altered	Yes

Section Dimensions (single stud):	
Section Height	89 mm
Section Width	41 mm
Lip Length	11.50 mm
Inside Radius	2.00 mm
Material Thickness	0.95 mm
Yield Strength	350 MPa
Tensile Strength	420 MPa
Section Properties (single stud):	
Gross Area	176.653 mm^2
Section Mass	1.387 kg/m
Centroid Left	12.92 mm
Centroid Top	44.02 mm
Second Moment of Inertia Ix	224850 mm^4
Second Moment of Inertia Iy	41508 mm^4
Radius of Gyration rx	35.68 mm
Radius of Gyration ry	15.33 mm
Shear Centre x	32.60 mm
Shear Centre y	0.00 mm
Polar Gyration ro	50.91 mm
Torsion Constant J	53 mm^4
Warping Constant Cw	72.90 E06mm^6
Section Capacities (single stud):	
Shear Capacity ΦvVn	9.46 kN
Tension Capacity ΦtTn	51.85 kN
Compression Capacity ΦcPno	33.08 kN
Compression Capacity ΦcPn	15.86 kN
Bending Capacity ΦbMnxo-	1438.05 Nm
Bending Capacity ΦbMnx-	1248.69 Nm
Bending Capacity ΦbMnxo	1438.05 Nm
Bending Capacity ΦbMnx	1248.69 Nm

Stud Design for Panel 89

Company:	Framecad		
Project:	Layouts	Dwg Name:	Hesaaco mehdipoor school 25-12-97
		Detailer:	
		Print Date:	16-03-2019
Job Number:	180	Page No:	2

Stud Design for Panel L17

Company:	Framecad		
Project:	Layouts	Dwg Name:	Hesaaco mehdipoor school 25-12-97
		Detailer:	
		Print Date:	16-03-2019
Job Number:	180	Page No:	1

Panel Label:	L17
Design Basics:	
Steel Design Code	AISI S100-12 LRFD
Loading Code:	IBC 2015 LRFD
Wind Speed	W49
Snow Slope Factor	1.0
Snow Adjustment Factor	1.0
Wall Location	Internal
Dead Load (G)	0.000 kN/m
Live Load (Q1 = max(Q2,Q3))	0.000 kN/m
Roof Live Load (Q2)	0.000 kN/m
Floor Live Load (Q3)	0.000 kN/m
Live Load (Q4 = Q2+Q3)	0.000 kN/m
Snow Load (S)	0.000 kN/m
Wind Up Load (Wu)	0.000 kN/m
Wind Down Load (Wd)	0.000 kN/m
Wind Horizontal Load (Wh)	0.500 kPa
Panel Self Weight	0.759 kN/m
Applied Point Load (P)	1.1 kN
Impact Load (P2)	0.7 kN
Load Case Results (single stu	Maximum Stud Spacing
1.2G + +1.6Q2 + 1.0Q3	9000 mm
1.2G + 0.5Q2 + 1.6Q3	9000 mm
1.2G + 1.0Q3 + 1.6S	9000 mm
1.2G + 1.6P1	9000 mm
1.2G + 0.5Q4 + 1.0Wh	1717 mm
0.9G + 1.0Wu + 1.0Wh	1692 mm
0.42Wh	1727 mm
P2	933 mm
Design Results:	
Stud Material	89S41-095-350
Stud Spacing Type	Single Absolute
Nominal Wall Height	3410 mm
Nominal Noggin Spacing	1170 mm
Maximum Nominal Stud Spacing	600 mm
Actual Nominal Stud Spacing	600 mm
Stud Engineering Compliance	%
Manually Altered	Yes

Section Dimensions (single stud):	
Section Height	89 mm
Section Width	41 mm
Lip Length	11.50 mm
Inside Radius	2.00 mm
Material Thickness	0.95 mm
Yield Strength	350 MPa
Tensile Strength	420 MPa
Section Properties (single stud):	
Gross Area	176.653 mm^2
Section Mass	1.387 kg/m
Centroid Left	12.92 mm
Centroid Top	44.02 mm
Second Moment of Inertia Ix	224850 mm^4
Second Moment of Inertia Iy	41508 mm^4
Radius of Gyration rx	35.68 mm
Radius of Gyration ry	15.33 mm
Shear Centre x	32.60 mm
Shear Centre y	0.00 mm
Polar Gyration ro	50.91 mm
Torsion Constant J	53 mm^4
Warping Constant Cw	72.90 E06mm^6
Section Capacities (single stud):	
Shear Capacity ΦvVn	9.46 kN
Tension Capacity ΦtTn	51.85 kN
Compression Capacity ΦcPno	33.08 kN
Compression Capacity ΦcPn	15.86 kN
Bending Capacity ΦbMnxo-	1438.05 Nm
Bending Capacity ΦbMnx-	1248.69 Nm
Bending Capacity ΦbMnxo	1438.05 Nm
Bending Capacity ΦbMnx	1248.69 Nm

Stud Design for Panel 89

Company:	Framecad		
Project:	Layouts	Dwg Name:	Hesaaco mehdipoor school 25-12-97
		Detailer:	
		Print Date:	16-03-2019
Job Number:	180	Page No:	2

Stud Design for Panel L18

Company:	Framecad		
Project:	Layouts	Dwg Name:	Hesaaco mehdipoor school 25-12-97
		Detailer:	
		Print Date:	16-03-2019
Job Number:	180	Page No:	1

Panel Label:	L17	
Design Basics:		
Steel Design Code	AISI S100-12 LRFD	
Loading Code:	IBC 2015 LRFD	
Wind Speed	W49	
Snow Slope Factor	1.0	
Snow Adjustment Factor	1.0	
Wall Location	Internal	
Dead Load (G)	2.207	kN/m
Live Load (Q1 = max(Q2,Q3))	1.506	kN/m
Roof Live Load (Q2)	0.000	kN/m
Floor Live Load (Q3)	1.506	kN/m
Live Load (Q4 = Q2+Q3)	1.506	kN/m
Snow Load (S)	0.000	kN/m
Wind Up Load (Wu)	0.000	kN/m
Wind Down Load (Wd)	0.000	kN/m
Wind Horizontal Load (Wh)	0.500	kPa
Panel Self Weight	0.759	kN/m
Applied Point Load (P)	1.1	kN
Impact Load (P2)	0.7	kN
Load Case Results (single stu	Maximum Stud Spacing	
1.2G + +1.6Q2 + 1.0Q3	3817	mm
1.2G + 0.5Q2 + 1.6Q3	3135	mm
1.2G + 1.0Q3 + 1.6S	3817	mm
1.2G + 1.6P1	5322	mm
1.2G + 0.5Q4 + 1.0Wh	1292	mm
0.9G + 1.0Wu + 1.0Wh	1492	mm
0.42Wh	1727	mm
P2	933	mm
Design Results:		
Stud Material	89S41-095-350	
Stud Spacing Type	Single Absolute	
Nominal Wall Height	3410	mm
Nominal Noggin Spacing	1170	mm
Maximum Nominal Stud Spacing	600	mm
Actual Nominal Stud Spacing	600	mm
Stud Engineering Compliance		%
Manually Altered	Yes	

Section Dimensions (single stud):		
Section Height	89	mm
Section Width	41	mm
Lip Length	11.50	mm
Inside Radius	2.00	mm
Material Thickness	0.95	mm
Yield Strength	350	MPa
Tensile Strength	420	MPa
Section Properties (single stud):		
Gross Area	176.653	mm^2
Section Mass	1.387	kg/m
Centroid Left	12.92	mm
Centroid Top	44.02	mm
Second Moment of Inertia Ix	224850	mm^4
Second Moment of Inertia Iy	41508	mm^4
Radius of Gyration rx	35.68	mm
Radius of Gyration ry	15.33	mm
Shear Centre x	32.60	mm
Shear Centre y	0.00	mm
Polar Gyration ro	50.91	mm
Torsion Constant J	53	mm^4
Warping Constant Cw	72.90	$E06mm^6$
Section Capacities (single stud):		
Shear Capacity ΦvVn	9.46	kN
Tension Capacity ΦtTn	51.85	kN
Compression Capacity ΦcPno	33.08	kN
Compression Capacity ΦcPn	15.86	kN
Bending Capacity ΦbMnxo-	1438.05	Nm
Bending Capacity ΦbMnx-	1248.69	Nm
Bending Capacity ΦbMnxo	1438.05	Nm
Bending Capacity ΦbMnx	1248.69	Nm

Stud Design for Panel 89

Company:	Framecad		
Project:	Layouts	Dwg Name:	Hesaaco mehdipoor school 25-12-97
		Detailer:	
		Print Date:	16-03-2019
Job Number:	180	Page No:	2

Stud Design for Panel L19

Company:	Framecad		
Project:	Layouts	Dwg Name:	Hesaaco mehdipoor school 25-12-97
		Detailer:	
		Print Date:	16-03-2019
Job Number:	180	Page No:	1

Panel Label:	L17
Design Basics:	
Steel Design Code	AISI S100-12 LRFD
Loading Code:	IBC 2015 LRFD
Wind Speed	W49
Snow Slope Factor	1.0
Snow Adjustment Factor	1.0
Wall Location	Internal
Dead Load (G)	0.660 kN/m
Live Load (Q1 = max(Q2,Q3))	0.450 kN/m
Roof Live Load (Q2)	0.000 kN/m
Floor Live Load (Q3)	0.450 kN/m
Live Load (Q4 = Q2+Q3)	0.450 kN/m
Snow Load (S)	0.000 kN/m
Wind Up Load (Wu)	0.000 kN/m
Wind Down Load (Wd)	0.000 kN/m
Wind Horizontal Load (Wh)	0.500 kPa
Panel Self Weight	0.759 kN/m
Applied Point Load (P)	1.1 kN
Impact Load (P2)	0.7 kN
Load Case Results (single stu	Maximum Stud Spacing
1.2G + +1.6Q2 + 1.0Q3	9000 mm
1.2G + 0.5Q2 + 1.6Q3	9000 mm
1.2G + 1.0Q3 + 1.6S	9000 mm
1.2G + 1.6P1	9000 mm
1.2G + 0.5Q4 + 1.0Wh	1542 mm
0.9G + 1.0Wu + 1.0Wh	1592 mm
0.42Wh	1727 mm
P2	933 mm
Design Results:	
Stud Material	89S41-095-350
Stud Spacing Type	Single Absolute
Nominal Wall Height	3410 mm
Nominal Noggin Spacing	1170 mm
Maximum Nominal Stud Spacing	600 mm
Actual Nominal Stud Spacing	600 mm
Stud Engineering Compliance	%
Manually Altered	Yes

Section Dimensions (single stud):	
Section Height	89 mm
Section Width	41 mm
Lip Length	11.50 mm
Inside Radius	2.00 mm
Material Thickness	0.95 mm
Yield Strength	350 MPa
Tensile Strength	420 MPa
Section Properties (single stud):	
Gross Area	176.653 mm^2
Section Mass	1.387 kg/m
Centroid Left	12.92 mm
Centroid Top	44.02 mm
Second Moment of Inertia Ix	224850 mm^4
Second Moment of Inertia Iy	41508 mm^4
Radius of Gyration rx	35.68 mm
Radius of Gyration ry	15.33 mm
Shear Centre x	32.60 mm
Shear Centre y	0.00 mm
Polar Gyration ro	50.91 mm
Torsion Constant J	53 mm^4
Warping Constant Cw	72.90 E06mm^6
Section Capacities (single stud):	
Shear Capacity ΦvVn	9.46 kN
Tension Capacity ΦtTn	51.85 kN
Compression Capacity ΦcPno	33.08 kN
Compression Capacity ΦcPn	15.86 kN
Bending Capacity ΦbMnxo-	1438.05 Nm
Bending Capacity ΦbMnx-	1248.69 Nm
Bending Capacity ΦbMnxo	1438.05 Nm
Bending Capacity ΦbMnx	1248.69 Nm

Stud Design for Panel 89

Company:	Framecad		
Project:	Layouts	Dwg Name:	Hesaaco mehdipoor school 25-12-97
		Detailer:	
		Print Date:	16-03-2019
Job Number:	180	Page No:	2

Stud Design for Panel L20

Company:	Framecad		
Project:	Layouts	Dwg Name:	Hesaaco mehdipoor school 25-12-97
		Detailer:	
		Print Date:	16-03-2019
Job Number:	180	Page No:	1

Panel Label:	L17	
Design Basics:		
Steel Design Code	AISI S100-12 LRFD	
Loading Code:	IBC 2015 LRFD	
Wind Speed	W49	
Snow Slope Factor	1.0	
Snow Adjustment Factor	1.0	
Wall Location	Internal	
Dead Load (G)	2.219	kN/m
Live Load (Q1 = max(Q2,Q3))	1.514	kN/m
Roof Live Load (Q2)	0.000	kN/m
Floor Live Load (Q3)	1.514	kN/m
Live Load (Q4 = Q2+Q3)	1.514	kN/m
Snow Load (S)	0.000	kN/m
Wind Up Load (Wu)	0.000	kN/m
Wind Down Load (Wd)	0.000	kN/m
Wind Horizontal Load (Wh)	0.500	kPa
Panel Self Weight	0.759	kN/m
Applied Point Load (P)	1.1	kN
Impact Load (P2)	0.7	kN
Load Case Results (single stu	Maximum Stud Spacing	
1.2G + +1.6Q2 + 1.0Q3	3796	mm
1.2G + 0.5Q2 + 1.6Q3	3118	mm
1.2G + 1.0Q3 + 1.6S	3796	mm
1.2G + 1.6P1	5293	mm
1.2G + 0.5Q4 + 1.0Wh	1267	mm
0.9G + 1.0Wu + 1.0Wh	1492	mm
0.42Wh	1727	mm
P2	933	mm
Design Results:		
Stud Material	89S41-095-350	
Stud Spacing Type	Single Absolute	
Nominal Wall Height	3410	mm
Nominal Noggin Spacing	1170	mm
Maximum Nominal Stud Spacing	600	mm
Actual Nominal Stud Spacing	600	mm
Stud Engineering Compliance		%
Manually Altered	Yes	

Section Dimensions (single stud):		
Section Height	89	mm
Section Width	41	mm
Lip Length	11.50	mm
Inside Radius	2.00	mm
Material Thickness	0.95	mm
Yield Strength	350	MPa
Tensile Strength	420	MPa
Section Properties (single stud):		
Gross Area	176.653	mm^2
Section Mass	1.387	kg/m
Centroid Left	12.92	mm
Centroid Top	44.02	mm
Second Moment of Inertia Ix	224850	mm^4
Second Moment of Inertia Iy	41508	mm^4
Radius of Gyration rx	35.68	mm
Radius of Gyration ry	15.33	mm
Shear Centre x	32.60	mm
Shear Centre y	0.00	mm
Polar Gyration ro	50.91	mm
Torsion Constant J	53	mm^4
Warping Constant Cw	72.90	$E06mm^6$
Section Capacities (single stud):		
Shear Capacity ΦvVn	9.46	kN
Tension Capacity ΦtTn	51.85	kN
Compression Capacity ΦcPno	33.08	kN
Compression Capacity ΦcPn	15.86	kN
Bending Capacity ΦbMnxo-	1438.05	Nm
Bending Capacity ΦbMnx-	1248.69	Nm
Bending Capacity ΦbMnxo	1438.05	Nm
Bending Capacity ΦbMnx	1248.69	Nm

Stud Design for Panel 89

Company:	Framecad		
Project:	Layouts	Dwg Name:	Hesaaco mehdipoor school 25-12-97
		Detailer:	
		Print Date:	16-03-2019
Job Number:	180	Page No:	2

Stud Design for Panel L21

Company:	Framecad		
Project:	Layouts	Dwg Name:	Hesaaco mehdipoor school 25-12-97
		Detailer:	
		Print Date:	16-03-2019
Job Number:	180	Page No:	1

Panel Label:	L17
Design Basics:	
Steel Design Code	AISI S100-12 LRFD
Loading Code:	IBC 2015 LRFD
Wind Speed	W49
Snow Slope Factor	1.0
Snow Adjustment Factor	1.0
Wall Location	Internal
Dead Load (G)	0.000 kN/m
Live Load (Q1 = max(Q2,Q3))	0.000 kN/m
Roof Live Load (Q2)	0.000 kN/m
Floor Live Load (Q3)	0.000 kN/m
Live Load (Q4 = Q2+Q3)	0.000 kN/m
Snow Load (S)	0.000 kN/m
Wind Up Load (Wu)	0.000 kN/m
Wind Down Load (Wd)	0.000 kN/m
Wind Horizontal Load (Wh)	0.500 kPa
Panel Self Weight	0.759 kN/m
Applied Point Load (P)	1.1 kN
Impact Load (P2)	0.7 kN
Load Case Results (single stu	Maximum Stud Spacing
1.2G + +1.6Q2 + 1.0Q3	9000 mm
1.2G + 0.5Q2 + 1.6Q3	9000 mm
1.2G + 1.0Q3 + 1.6S	9000 mm
1.2G + 1.6P1	9000 mm
1.2G + 0.5Q4 + 1.0Wh	1717 mm
0.9G + 1.0Wu + 1.0Wh	1692 mm
0.42Wh	1727 mm
P2	933 mm
Design Results:	
Stud Material	89S41-095-350
Stud Spacing Type	Single Absolute
Nominal Wall Height	3410 mm
Nominal Noggin Spacing	1170 mm
Maximum Nominal Stud Spacing	600 mm
Actual Nominal Stud Spacing	600 mm
Stud Engineering Compliance	%
Manually Altered	Yes

Section Dimensions (single stud):	
Section Height	89 mm
Section Width	41 mm
Lip Length	11.50 mm
Inside Radius	2.00 mm
Material Thickness	0.95 mm
Yield Strength	350 MPa
Tensile Strength	420 MPa
Section Properties (single stud):	
Gross Area	176.653 mm^2
Section Mass	1.387 kg/m
Centroid Left	12.92 mm
Centroid Top	44.02 mm
Second Moment of Inertia Ix	224850 mm^4
Second Moment of Inertia Iy	41508 mm^4
Radius of Gyration rx	35.68 mm
Radius of Gyration ry	15.33 mm
Shear Centre x	32.60 mm
Shear Centre y	0.00 mm
Polar Gyration ro	50.91 mm
Torsion Constant J	53 mm^4
Warping Constant Cw	72.90 E06mm^6
Section Capacities (single stud):	
Shear Capacity ΦvVn	9.46 kN
Tension Capacity ΦtTn	51.85 kN
Compression Capacity ΦcPno	33.08 kN
Compression Capacity ΦcPn	15.86 kN
Bending Capacity ΦbMnxo-	1438.05 Nm
Bending Capacity ΦbMnx-	1248.69 Nm
Bending Capacity ΦbMnxo	1438.05 Nm
Bending Capacity ΦbMnx	1248.69 Nm

Stud Design for Panel 89

Company:	Framecad		
Project:	Layouts	Dwg Name:	Hesaaco mehdipoor school 25-12-97
		Detailer:	
		Print Date:	16-03-2019
Job Number:	180	Page No:	2

Stud Design for Panel L22

Company:	Framecad		
Project:	Layouts	Dwg Name:	Hesaaco mehdipoor school 25-12-97
		Detailer:	
		Print Date:	16-03-2019
Job Number:	180	Page No:	1

Panel Label:	L17
Design Basics:	
Steel Design Code	AISI S100-12 LRFD
Loading Code:	IBC 2015 LRFD
Wind Speed	W49
Snow Slope Factor	1.0
Snow Adjustment Factor	1.0
Wall Location	Internal
Dead Load (G)	0.000 kN/m
Live Load (Q1 = max(Q2,Q3))	0.000 kN/m
Roof Live Load (Q2)	0.000 kN/m
Floor Live Load (Q3)	0.000 kN/m
Live Load (Q4 = Q2+Q3)	0.000 kN/m
Snow Load (S)	0.000 kN/m
Wind Up Load (Wu)	0.000 kN/m
Wind Down Load (Wd)	0.000 kN/m
Wind Horizontal Load (Wh)	0.500 kPa
Panel Self Weight	0.759 kN/m
Applied Point Load (P)	1.1 kN
Impact Load (P2)	0.7 kN
Load Case Results (single stu	Maximum Stud Spacing
1.2G + +1.6Q2 + 1.0Q3	9000 mm
1.2G + 0.5Q2 + 1.6Q3	9000 mm
1.2G + 1.0Q3 + 1.6S	9000 mm
1.2G + 1.6P1	9000 mm
1.2G + 0.5Q4 + 1.0Wh	1717 mm
0.9G + 1.0Wu + 1.0Wh	1692 mm
0.42Wh	1727 mm
P2	933 mm
Design Results:	
Stud Material	89S41-095-350
Stud Spacing Type	Single Absolute
Nominal Wall Height	3410 mm
Nominal Noggin Spacing	1170 mm
Maximum Nominal Stud Spacing	600 mm
Actual Nominal Stud Spacing	600 mm
Stud Engineering Compliance	%
Manually Altered	Yes

Section Dimensions (single stud):	
Section Height	89 mm
Section Width	41 mm
Lip Length	11.50 mm
Inside Radius	2.00 mm
Material Thickness	0.95 mm
Yield Strength	350 MPa
Tensile Strength	420 MPa
Section Properties (single stud):	
Gross Area	176.653 mm^2
Section Mass	1.387 kg/m
Centroid Left	12.92 mm
Centroid Top	44.02 mm
Second Moment of Inertia Ix	224850 mm^4
Second Moment of Inertia Iy	41508 mm^4
Radius of Gyration rx	35.68 mm
Radius of Gyration ry	15.33 mm
Shear Centre x	32.60 mm
Shear Centre y	0.00 mm
Polar Gyration ro	50.91 mm
Torsion Constant J	53 mm^4
Warping Constant Cw	72.90 E06mm^6
Section Capacities (single stud):	
Shear Capacity ΦvVn	9.46 kN
Tension Capacity ΦtTn	51.85 kN
Compression Capacity ΦcPno	33.08 kN
Compression Capacity ΦcPn	15.86 kN
Bending Capacity ΦbMnxo-	1438.05 Nm
Bending Capacity ΦbMnx-	1248.69 Nm
Bending Capacity ΦbMnxo	1438.05 Nm
Bending Capacity ΦbMnx	1248.69 Nm

Stud Design for Panel 89

Company:	Framecad		
Project:	Layouts	Dwg Name:	Hesaaco mehdipoor school 25-12-97
		Detailer:	
		Print Date:	16-03-2019
Job Number:	180	Page No:	2

89S41-095-350	1	1140mm	89S41-095-350	1	1151mm	89S41-095-350	1	1154mm	89S41-095-350	3	1195mm	89S41-095-350	1	1219mm
89S41-095-350		1223mm	89S41-095-350		1224mm	89S41-095-350		3446mm	89S41-095-350		3700mm	89S41-095-350		594mm
89S41-095-350		676mm	89S41-095-350		794mm	89S41-095-350		840mm	89S41-095-350		844mm	89S41-095-350		845mm
89S41-095-350		858mm	89S41-095-350		876mm	89S41-095-350		894mm						

Assembly Weight	114.2kg	FRAMECAD 10g-19mm XDrive	

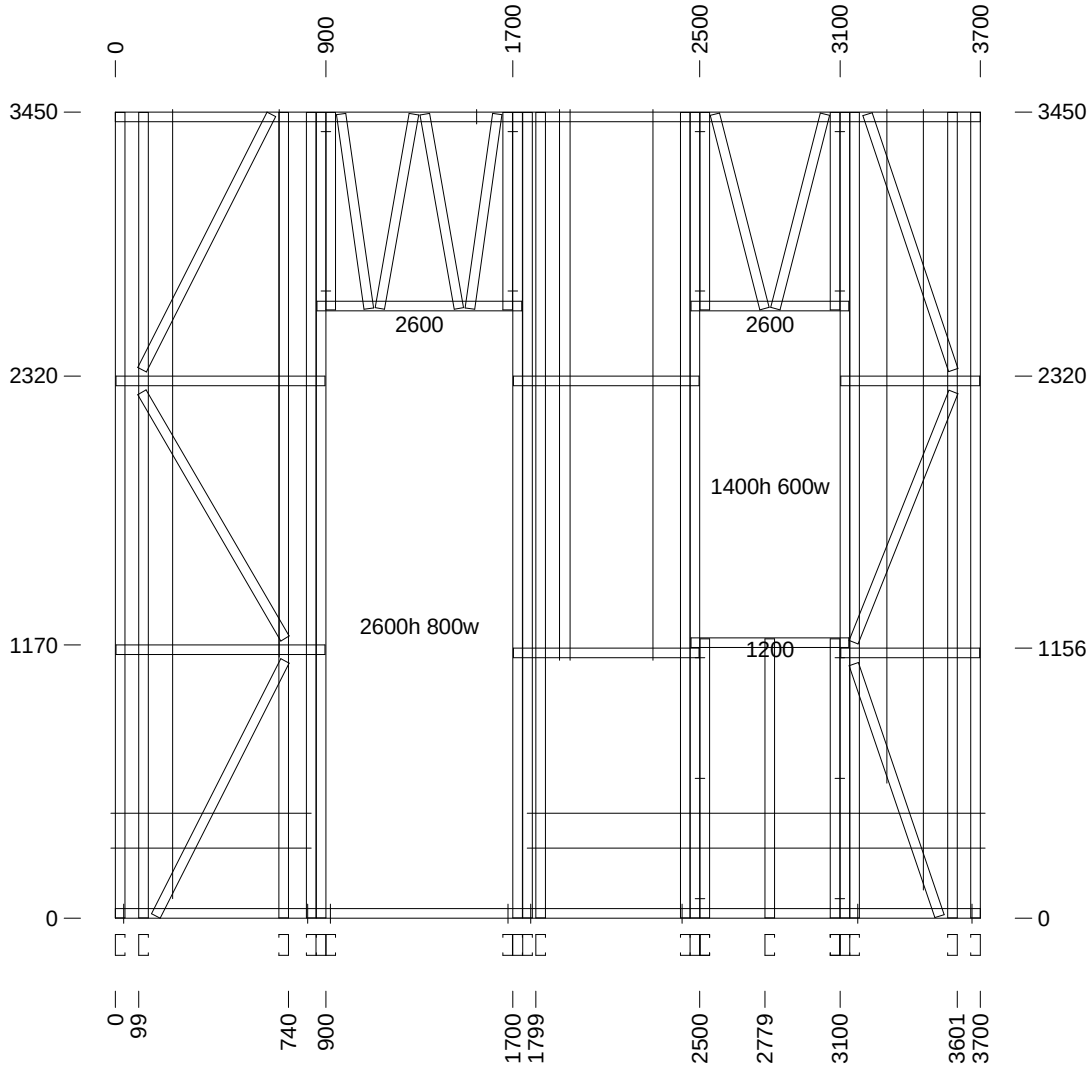

<<< Joins L17

Quantity Required = 1 Mark as L1 Header Engineering = Passed

Joins L2 >>>

89S41-095-350	1	1193mm	89S41-095-350	4	1195mm	89S41-095-350	1	1206mm	89S41-095-350	3	1211mm	89S41-095-350	2	1224mm
89S41-095-350		1231mm2	89S41-095-350		1576mm2	89S41-095-350		185mm1	89S41-095-350		2355mm2	89S41-095-350		3446mm12
89S41-095-350		4822mm2	89S41-095-350		845mm2	89S41-095-350		849mm2	89S41-095-350		855mm4	89S41-095-350		955mm2
Assembly Weight		116.9kg	FRAMECAD 10g-19mm XDrive											

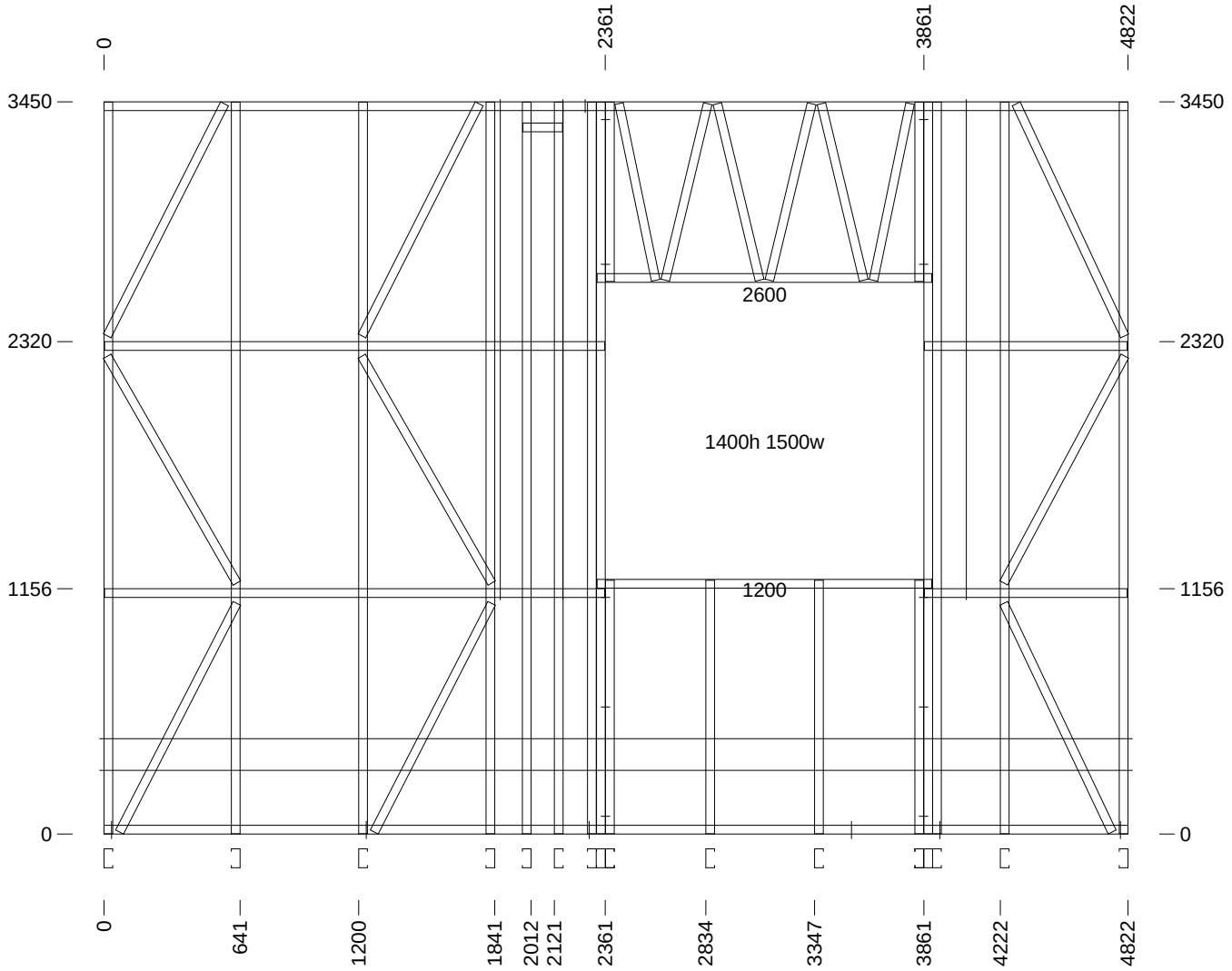

<<< Joins L1

Quantity Required = 1 Mark as L2 Header Engineering = Passed

Joins L3 >>>

89S41-095-350 1 1076mm 89S41-095-350 3446mm 89S41-095-350 854mm	89S41-095-350 1 1219mm 89S41-095-350 3700mm	89S41-095-350 1 1223mm 89S41-095-350 444mm	89S41-095-350 1 1224mm 89S41-095-350 845mm	89S41-095-350 2 2244mm 89S41-095-350 849mm	
Assembly Weight 84.7kg	FRAMECAD 10g-19mm XDrive				

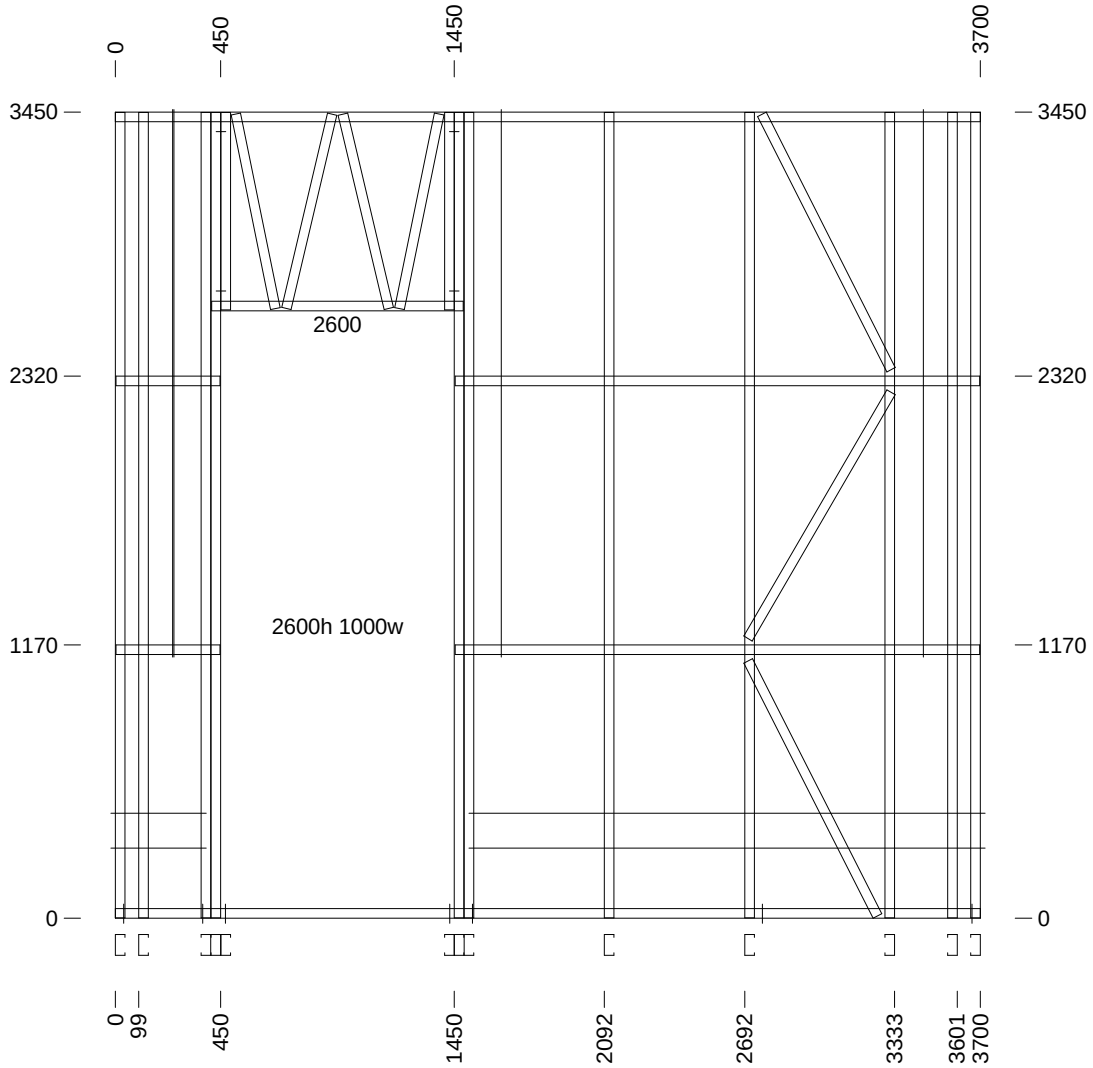

<<< Joins L2

Quantity Required = 1 Mark as L3 Header Engineering = Passed

Joins L17 >>>

150x32x0.95 Lintel	1	2252mm	89S41-095-350	1	1178mm	89S41-095-350	1	1192mm	89S41-095-350	6	1195mm	89S41-095-350	1	1222mm
89S41-095-350		1235mm	89S41-095-350		1243mm	89S41-095-350		2042mm	89S41-095-350		2078mm	89S41-095-350		3446mm
89S41-095-350		4700mm	89S41-095-350		644mm	89S41-095-350		845mm	89S41-095-350		849mm	89S41-095-350		855mm

Assembly Weight 113.3kg	FRAMECAD 10g-16mm Flathead	FRAMECAD 10g-19mm XDrive	

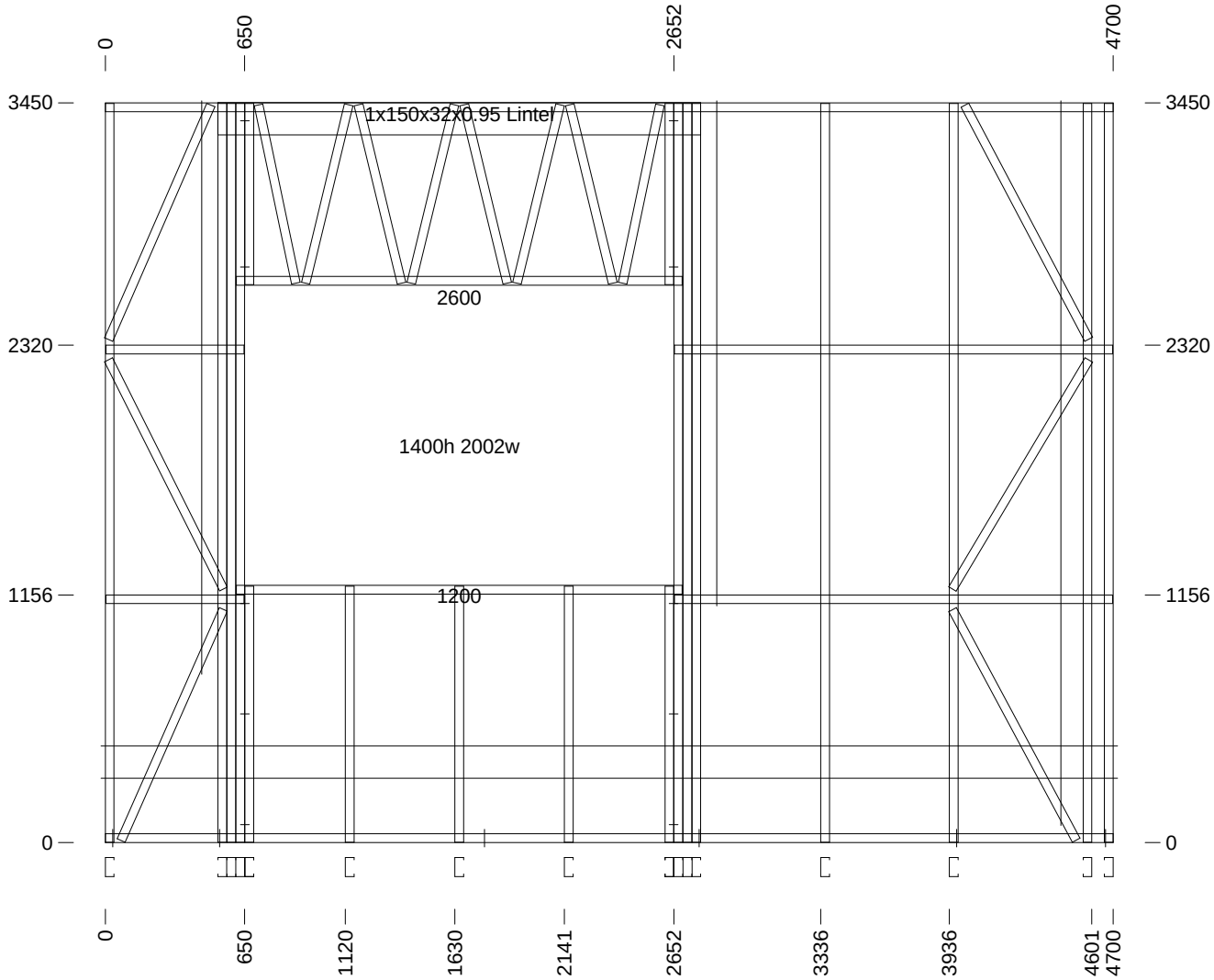

<<< Joins L17

Quantity Required = 1 Mark as L4 Header Engineering = Passed

Joins L5 >>>

89S41-095-350	1	1163mm	89S41-095-350	1	1174mm	89S41-095-350	1	1175mm	89S41-095-350	2	3446mm	89S41-095-350	2	516mm	89S41-095-350	2	522mm
Assembly Weight			17.5kg	FRAMECAD 10g-19mm XDrive													

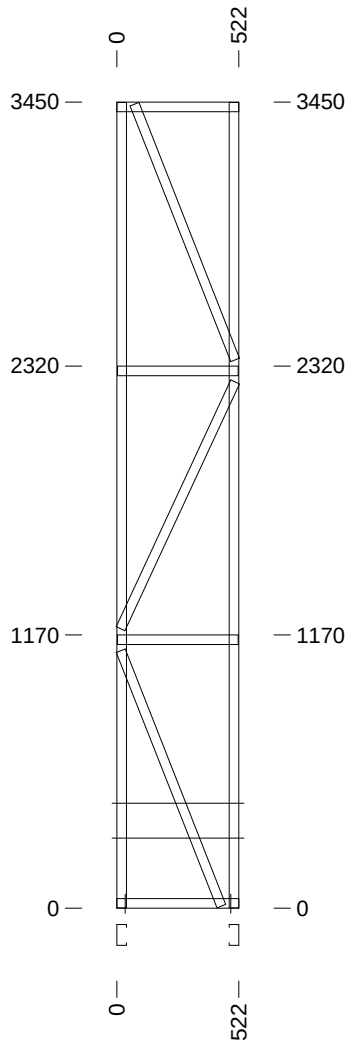

<<< Joins L4

Quantity Required = 1 Mark as L5 Header Engineering = Passed

Joins L6 >>>

89S41-095-350 1 1076mm 89S41-095-350 854mm2	89S41-095-350 2 1278mm	89S41-095-350 4 133mm	89S41-095-350 6 3446mm	89S41-095-350 2 845mm	89S41-095-350 2 849mm

Assembly Weight 41.9kg	FRAMECAD 10g-19mm XDrive		

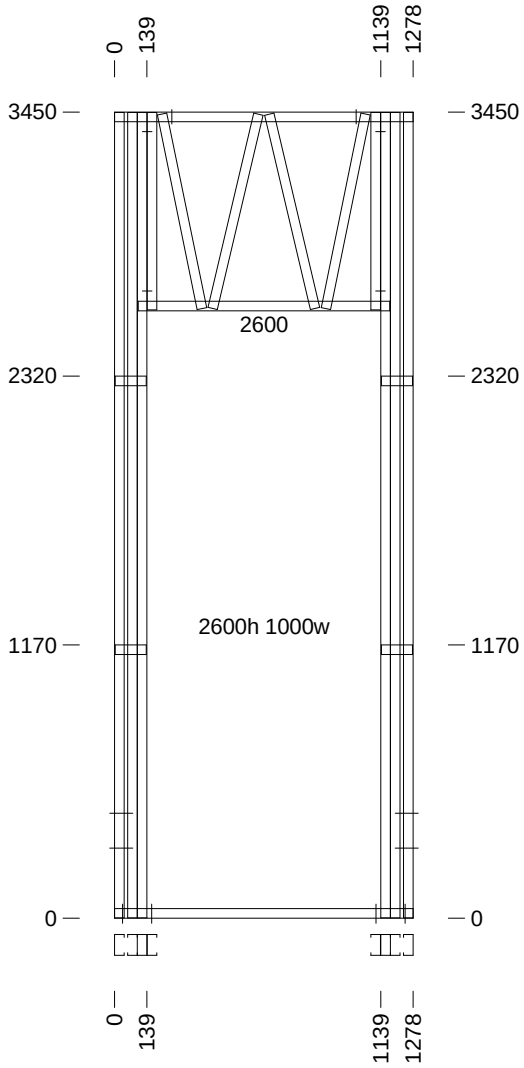

<<< Joins L5

Quantity Required = 1 Mark as L6 Header Engineering = Passed

Joins L7 >>>

89S41-095-350	1	1163mm	89S41-095-350	1	1174mm	89S41-095-350	1	1175mm	89S41-095-350	2	3446mm	89S41-095-350	2	516mm	89S41-095-350	2	522mm
Assembly Weight			17.5kg	FRAMECAD 10g-19mm XDrive													

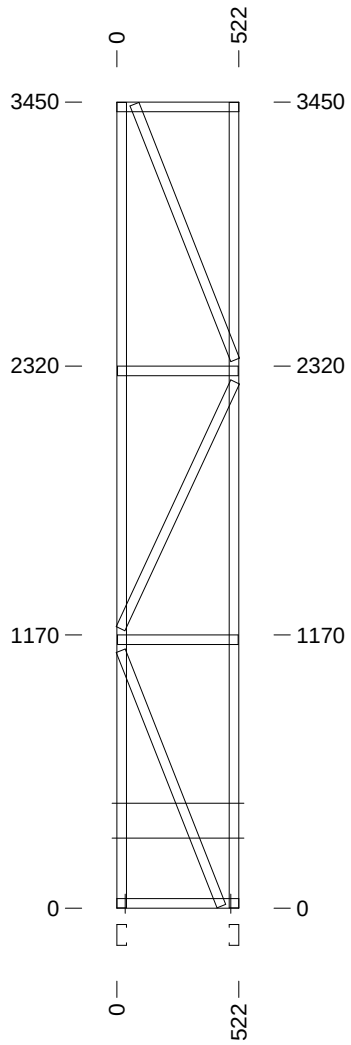

<<< Joins L8

Quantity Required = 1 Mark as L7 Header Engineering = Passed

Joins L6 >>>

89S41-095-350 2 1105mm	89S41-095-350 2 1111mm	89S41-095-350 1 1199mm	89S41-095-350 1 1205mm	89S41-095-350 1 1206mm	89S41-095-350 4 3446mm
Assembly Weight 30.6kg	FRAMECAD 10g-19mm XDrive				

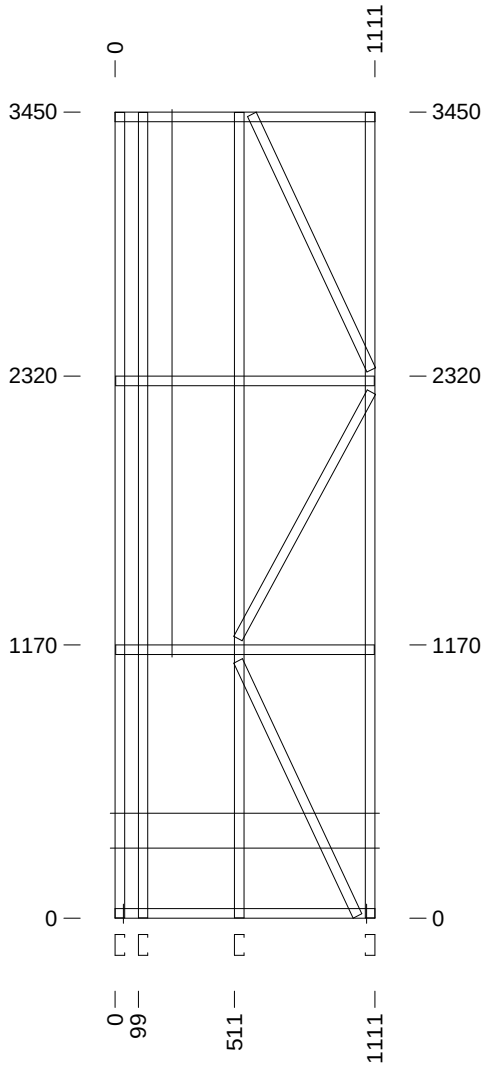

<<< Joins L7

Quantity Required = 1 Mark as L8 Header Engineering = Passed

Joins L22 >>>

150x32x0.95 Lintel	1	2250mm	89S41-095-350	1	1174mm	89S41-095-350	1	1188mm	89S41-095-350	1	1191mm	89S41-095-350	5	1195mm
89S41-095-350		1223mm1	89S41-095-350		1236mm1	89S41-095-350		1244mm1	89S41-095-350		2044mm2	89S41-095-350		2076mm2
89S41-095-350		3446mm2	89S41-095-350		4789mm2	89S41-095-350		733mm2	89S41-095-350		845mm2	89S41-095-350		849mm2
89S41-095-350		855mm6												

Assembly Weight	118.6kg	FRAMECAD 10g-16mm Flathead	FRAMECAD 10g-19mm XDrive

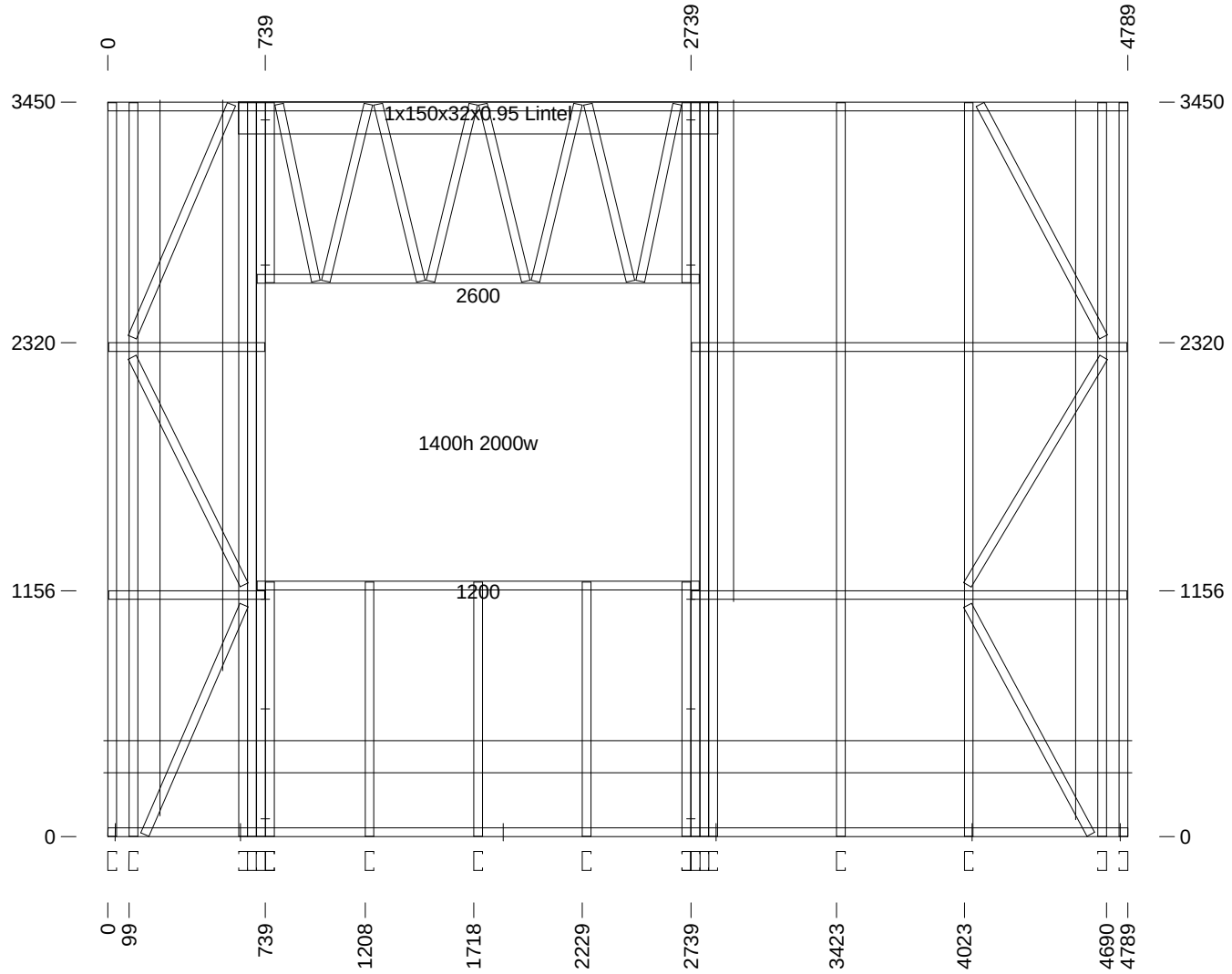

<<< Joins L22

Quantity Required = 1 Mark as L9 Header Engineering = Passed

Joins L10 >>>

89S41-095-350 1 1163mm	89S41-095-350 1 1174mm	89S41-095-350 1 1175mm	89S41-095-350 2 3446mm	89S41-095-350 2 516mm	89S41-095-350 2 522mm
Assembly Weight 17.5kg	FRAMECAD 10g-19mm XDrive				

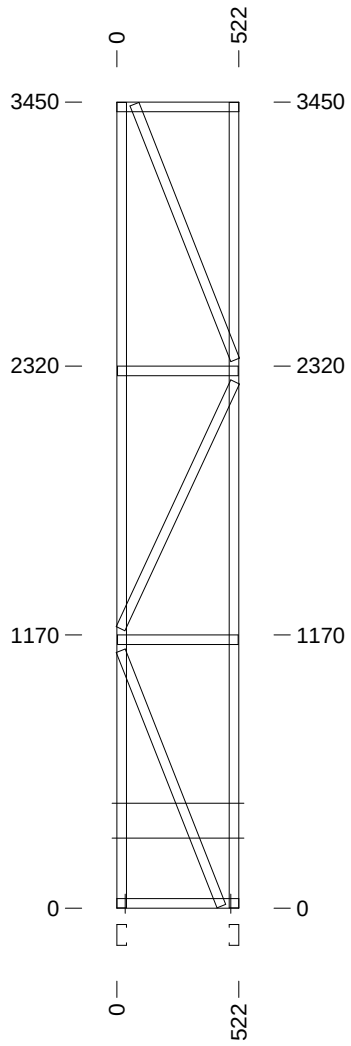

<<< Joins L9

Quantity Required = 1 Mark as L10 Header Engineering = Passed

Joins L11 >>>

89S41-095-350 1 1076mm 89S41-095-350 854mm2	89S41-095-350 2 1278mm	89S41-095-350 4 133mm	89S41-095-350 6 3446mm	89S41-095-350 2 845mm	89S41-095-350 2 849mm

Assembly Weight 41.9kg	FRAMECAD 10g-19mm XDrive		

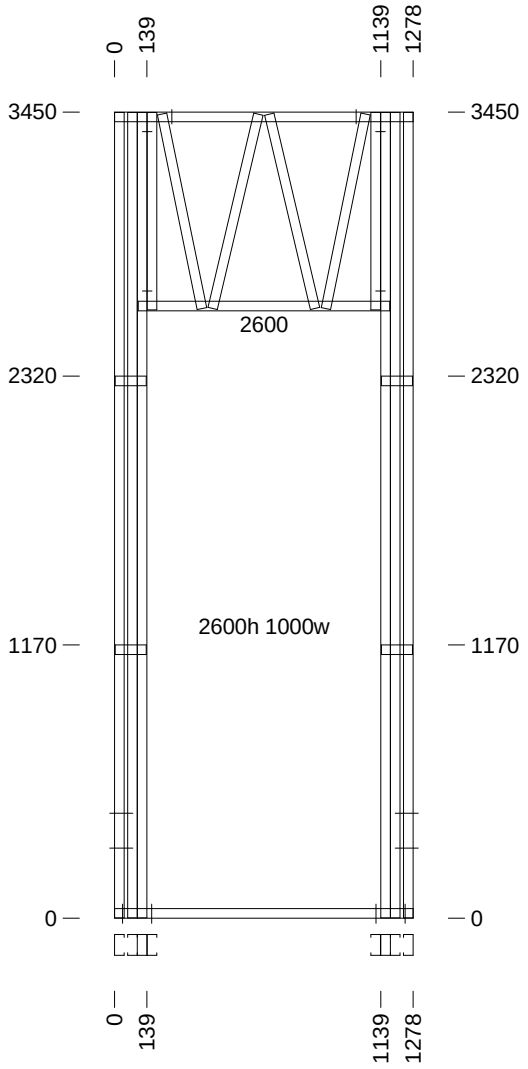

<<< Joins L10

Quantity Required = 1 Mark as L11 Header Engineering = Passed

Joins L12 >>>

89S41-095-350 1 1163mm	89S41-095-350 1 1174mm	89S41-095-350 1 1175mm	89S41-095-350 2 3446mm	89S41-095-350 2 516mm	89S41-095-350 2 522mm
Assembly Weight 17.5kg	FRAMECAD 10g-19mm XDrive				

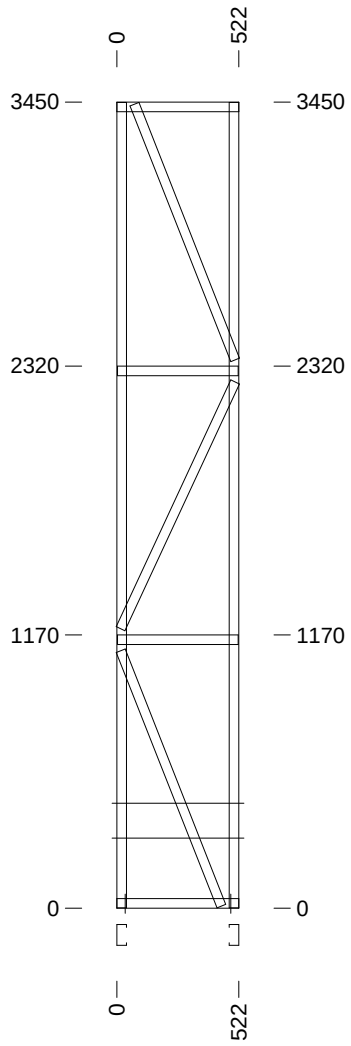

<<< Joins L13

Quantity Required = 1 Mark as L12 Header Engineering = Passed

Joins L11 >>>

89S41-095-350 2 1194mm	89S41-095-350 2 1200mm	89S41-095-350 1 1219mm	89S41-095-350 1 1223mm	89S41-095-350 1 1224mm	89S41-095-350 5 3446mm
Assembly Weight 36.0kg	FRAMECAD 10g-19mm XDrive				

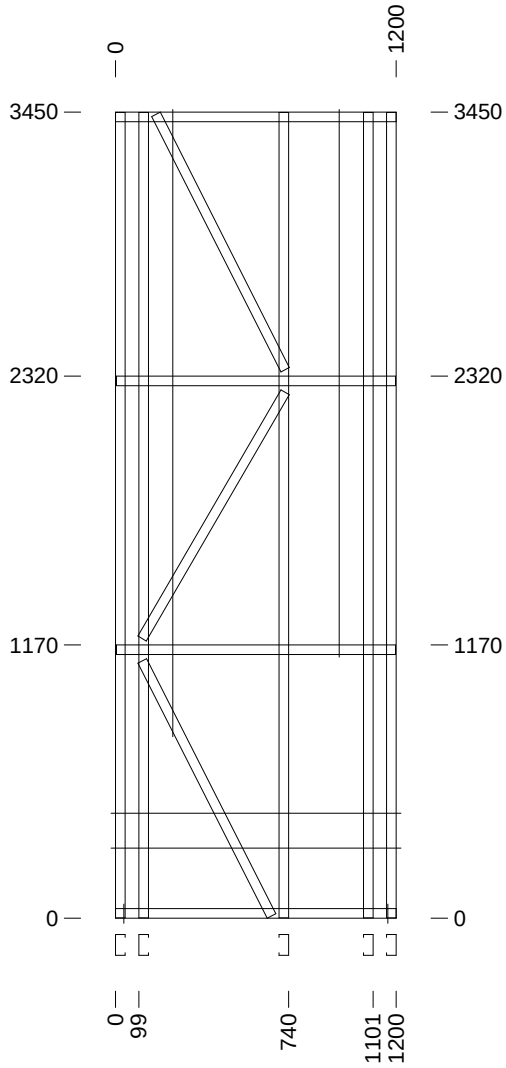

<<< Joins L12

Quantity Required = 1 Mark as L13 Header Engineering = Passed

Joins L14 >>>

89S41-095-350 1 1209mm 89S41-095-350 1223mm² 89S41-095-350 4822mm²	89S41-095-350 1 1215mm 89S41-095-350 1224mm² FRAMECAD 32x0.95 Strap 10g-5 4599mm⁴	89S41-095-350 1 1216mm 89S41-095-350 3446mm²	89S41-095-350 2 1219mm 89S41-095-350 4816mm²
Assembly Weight 90.2kg	FRAMECAD 10g-19mm XDrive		

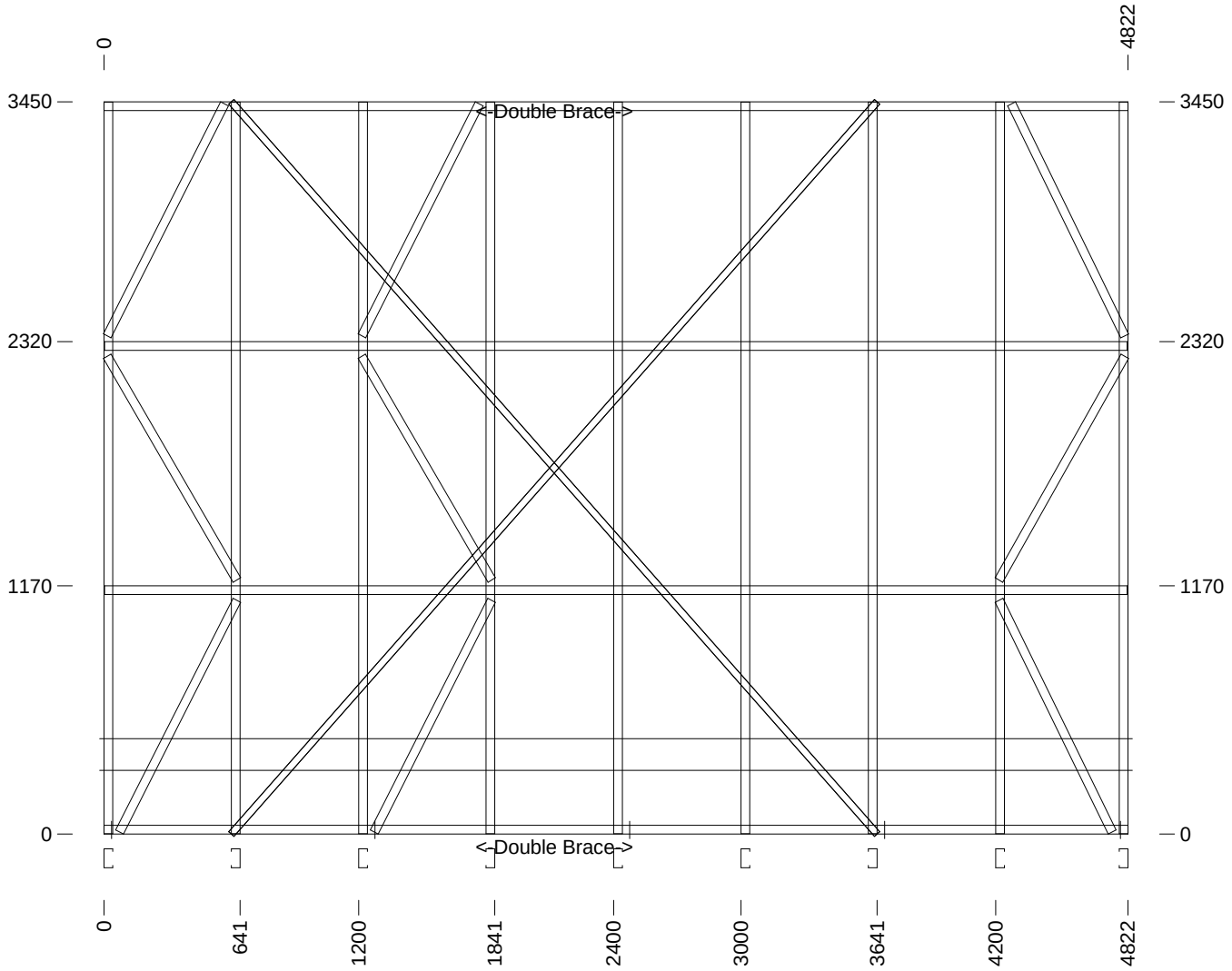

<<< Joins L13

Quantity Required = 1 Mark as L14 Header Engineering = Passed

Joins L15 >>>

150x32x0.95 Lintel	2	2250mm	89S41-095-350	1	1174mm	89S41-095-350	1	1188mm	89S41-095-350	1	1191mm	89S41-095-350	10	1195mm
89S41-095-350		1223mm1	89S41-095-350		1236mm1	89S41-095-350		1244mm1	89S41-095-350		1494mm2	89S41-095-350		2076mm4
89S41-095-350		3446mm8	89S41-095-350		7089mm2	89S41-095-350		733mm2	89S41-095-350		844mm2	89S41-095-350		845mm4
89S41-095-350		849mm4	89S41-095-350		855mm2									

Assembly Weight	184.2kg	FRAMECAD 10g-16mm Flathead	FRAMECAD 10g-19mm XDrive

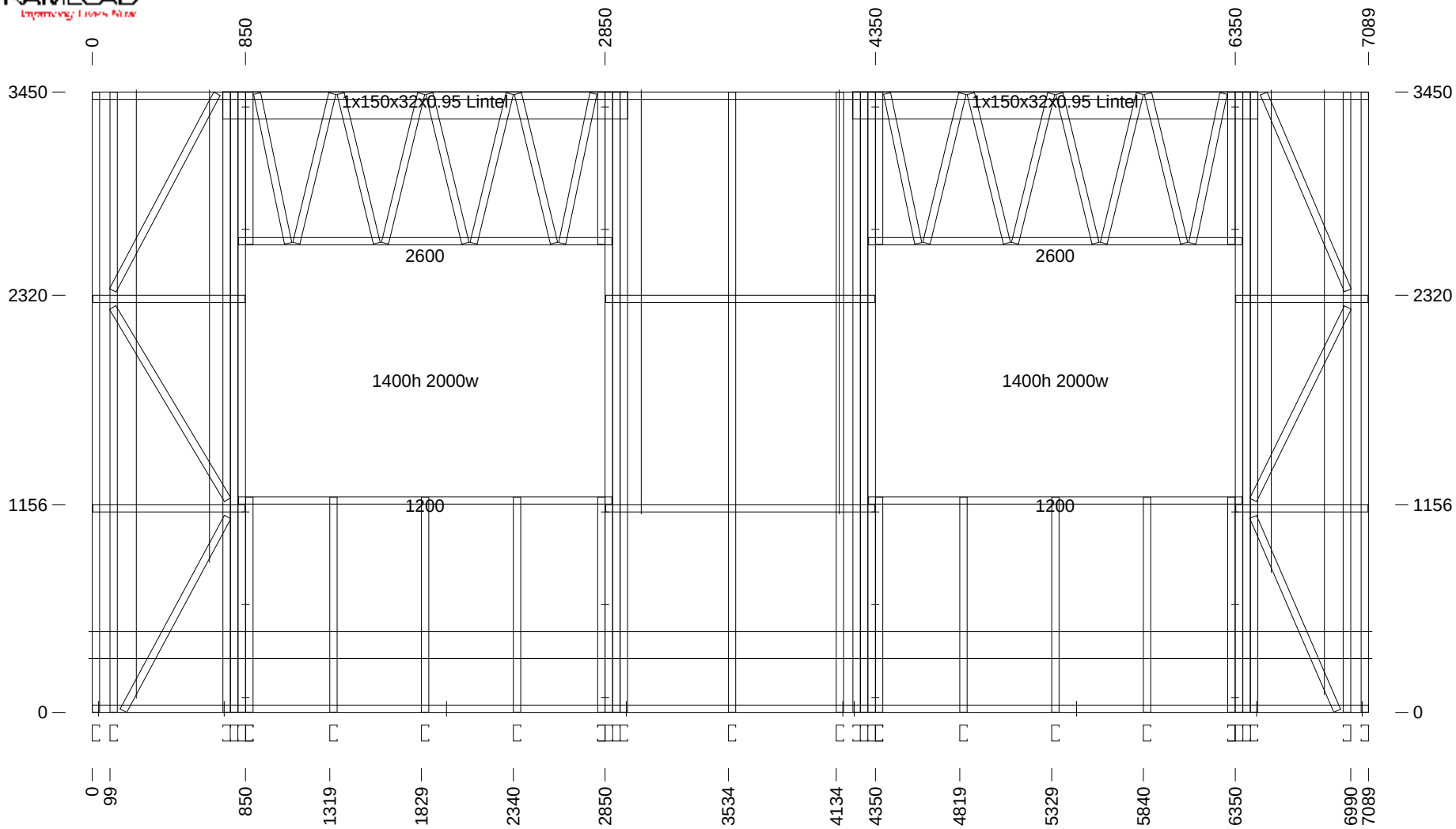

<<< Joins L14

Quantity Required = 1 Mark as L15 Header Engineering = Passed

Joins L22 >>>

150x32x0.95 Lintel	2	2250mm	89S41-095-350	1	1178mm	89S41-095-350	1	1192mm	89S41-095-350	11	1195mm	89S41-095-350	1	1211mm
89S41-095-350	1	1224mm	89S41-095-350	1	1228mm	89S41-095-350	1	1231mm	89S41-095-350	1	1241mm	89S41-095-350	1	1249mm
89S41-095-350	2	1494mm	89S41-095-350	4	2076mm	89S41-095-350	16	3446mm	89S41-095-350	2	644mm	89S41-095-350	2	6911mm
89S41-095-350	2	755mm	89S41-095-350	4	845mm	89S41-095-350	4	849mm	89S41-095-350	12	855mm			

Assembly Weight 178.7kg	FRAMECAD 10g-16mm Flathead	FRAMECAD 10g-19mm XDrive	

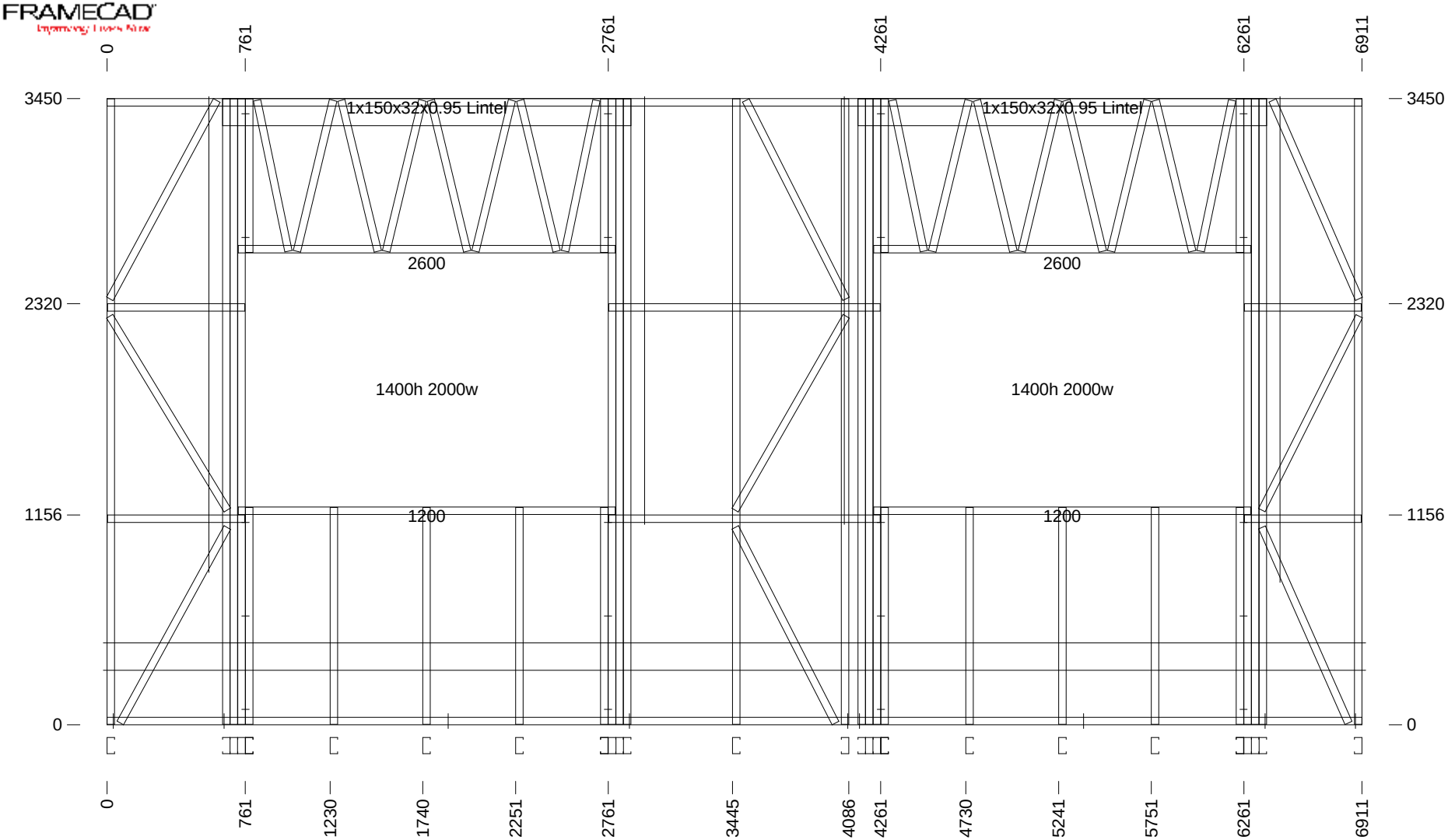

<<< Joins L22

Quantity Required = 1 Mark as L16 Header Engineering = Passed

Joins L17 >>>

89S41-095-350 1 1199mm 89S41-095-350 1223mm 3 89S41-095-350 4816mm 2	89S41-095-350 1 1205mm 89S41-095-350 1224mm 3 89S41-095-350 4822mm 2	89S41-095-350 1 1206mm 89S41-095-350 185mm 1 FRAMECAD 32x0.95 Strap 10g-5 4845mm 4	89S41-095-350 3 1219mm 89S41-095-350 3446mm 11
Assembly Weight 105.4kg	FRAMECAD 10g-19mm XDrive		

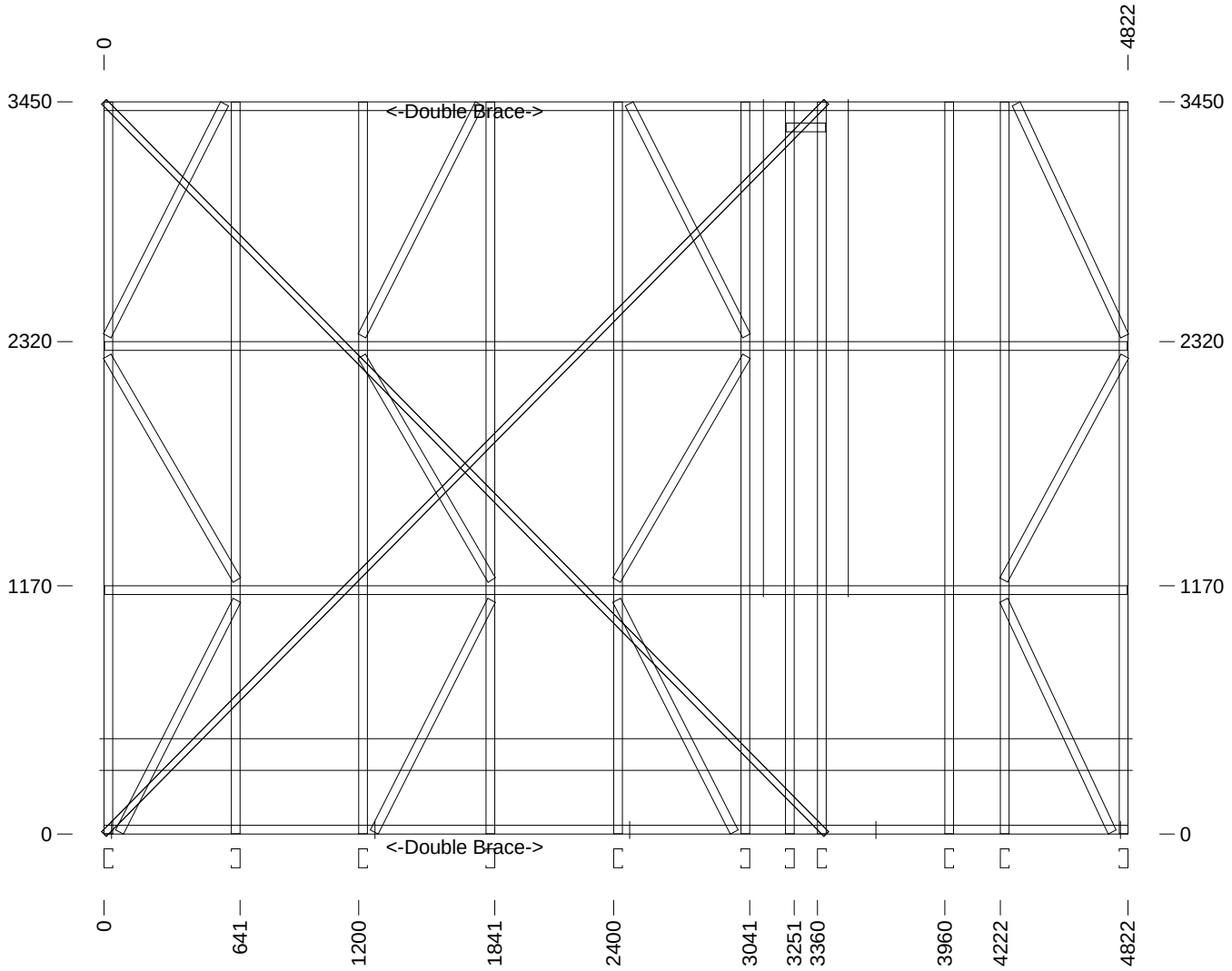

<<< Joins L3

Quantity Required = 1 Mark as L17 Header Engineering = Passed

Joins L1 >>>

89S41-095-350 1 1199mm 89S41-095-350 185mm1	89S41-095-350 1 1205mm 89S41-095-350 2444mm2	89S41-095-350 1 1206mm 89S41-095-350 2450mm2	89S41-095-350 1 1219mm 89S41-095-350 3446mm7	89S41-095-350 1 1223mm	89S41-095-350 1 1224mm
Assembly Weight 57.9kg	FRAMECAD 10g-19mm XDrive				

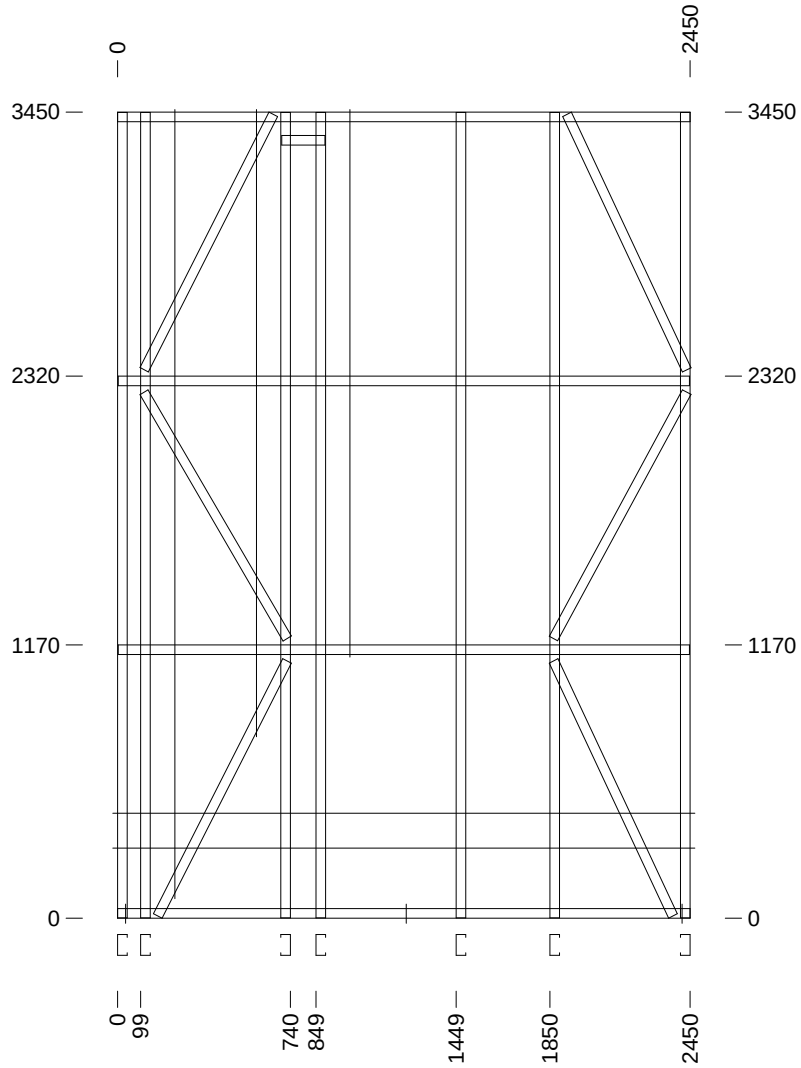

<<< Joins L19

Quantity Required = 1 Mark as L18 Header Engineering = Passed

Joins L17 >>>

89S41-095-350 2 3446mm	89S41-095-350 2 455mm	89S41-095-350 2 461mm
Assembly Weight 12.2kg	FRAMECAD 10g-19mm XDrive	

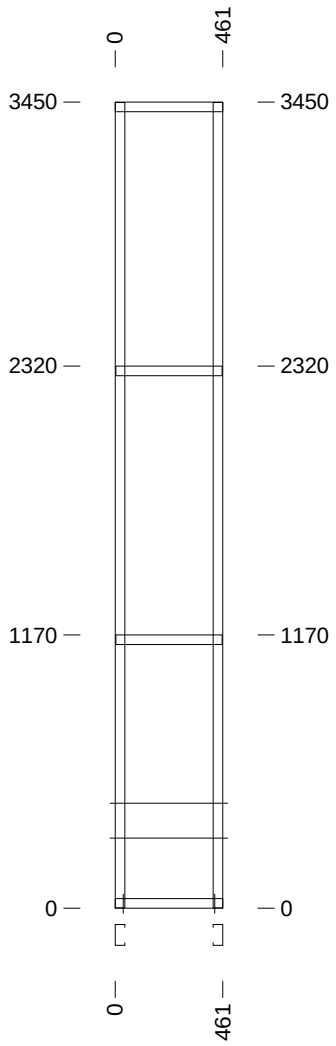

<<< Joins L20

Quantity Required = 1 Mark as L19 Header Engineering = Passed

Joins L18 >>>

89S41-095-350	2	1161mm	89S41-095-350	2	255mm	89S41-095-350	5	3446mm	89S41-095-350	2	840mm	89S41-095-350	2	844mm	89S41-095-350	2	845mm
89S41-095-350		876mm1	89S41-095-350		94mm2												

Assembly Weight	36.7kg	FRAMECAD 10g-19mm XDrive	

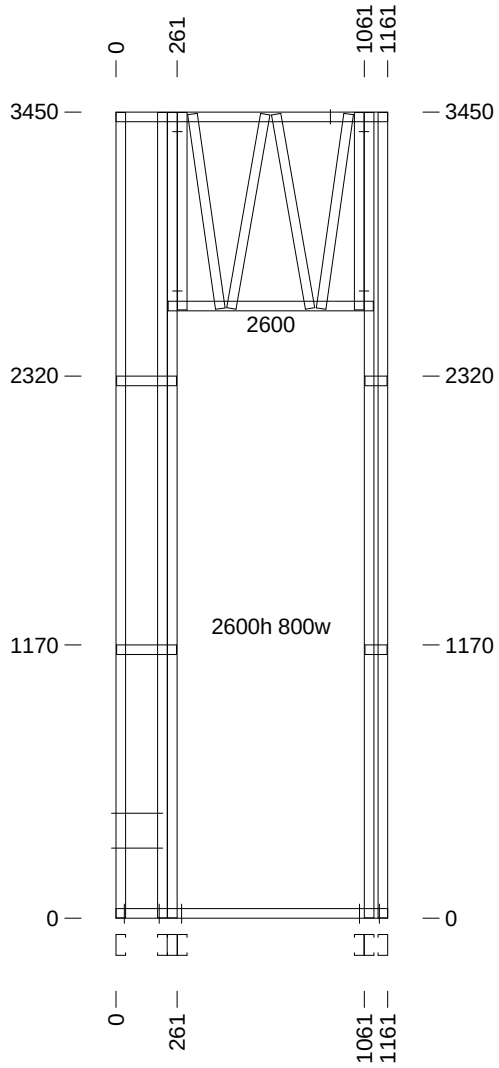

<<< Joins L2

Quantity Required = 1 Mark as L20 Header Engineering = Passed

Joins L19 >>>

89S41-095-350 1 1199mm	89S41-095-350 1 1205mm	89S41-095-350 1 1206mm	89S41-095-350 2 1466mm	89S41-095-350 2 1472mm	89S41-095-350 4 3446mm
Assembly Weight 32.6kg	FRAMECAD 10g-19mm XDrive				

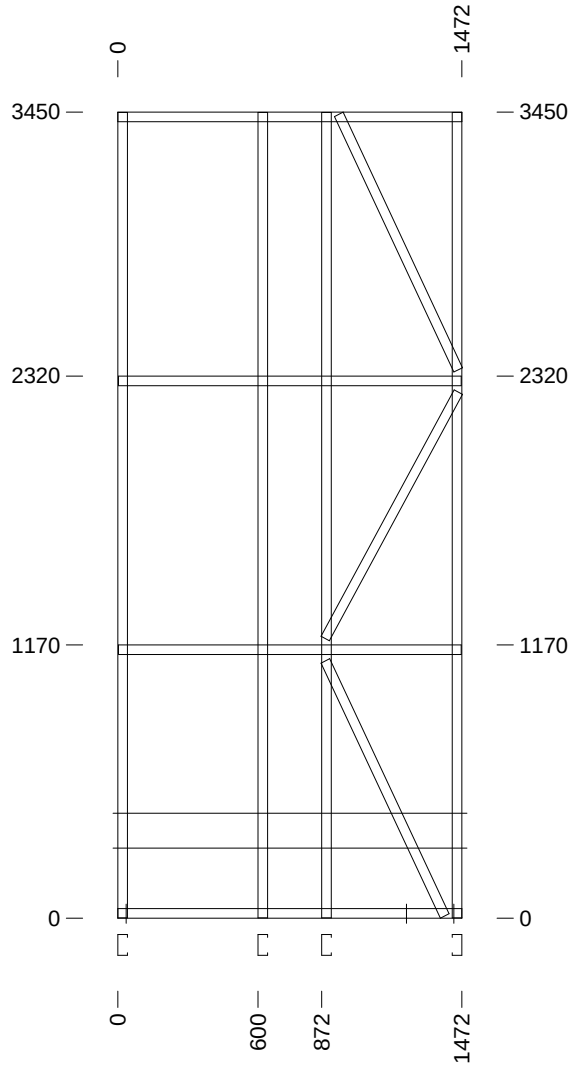

<<< Joins L18

Quantity Required = 1 Mark as L21 Header Engineering = Passed

Joins L1 >>>

89S41-095-350 1 1209mm 89S41-095-350 1223mm² 89S41-095-350 4822mm²	89S41-095-350 1 1215mm 89S41-095-350 1224mm² FRAMECAD 32x0.95 Strap 10g-5 4599mm²	89S41-095-350 1 1216mm 89S41-095-350 3446mm²	89S41-095-350 2 1219mm 89S41-095-350 4816mm²
Assembly Weight 90.2kg	FRAMECAD 10g-19mm XDrive		

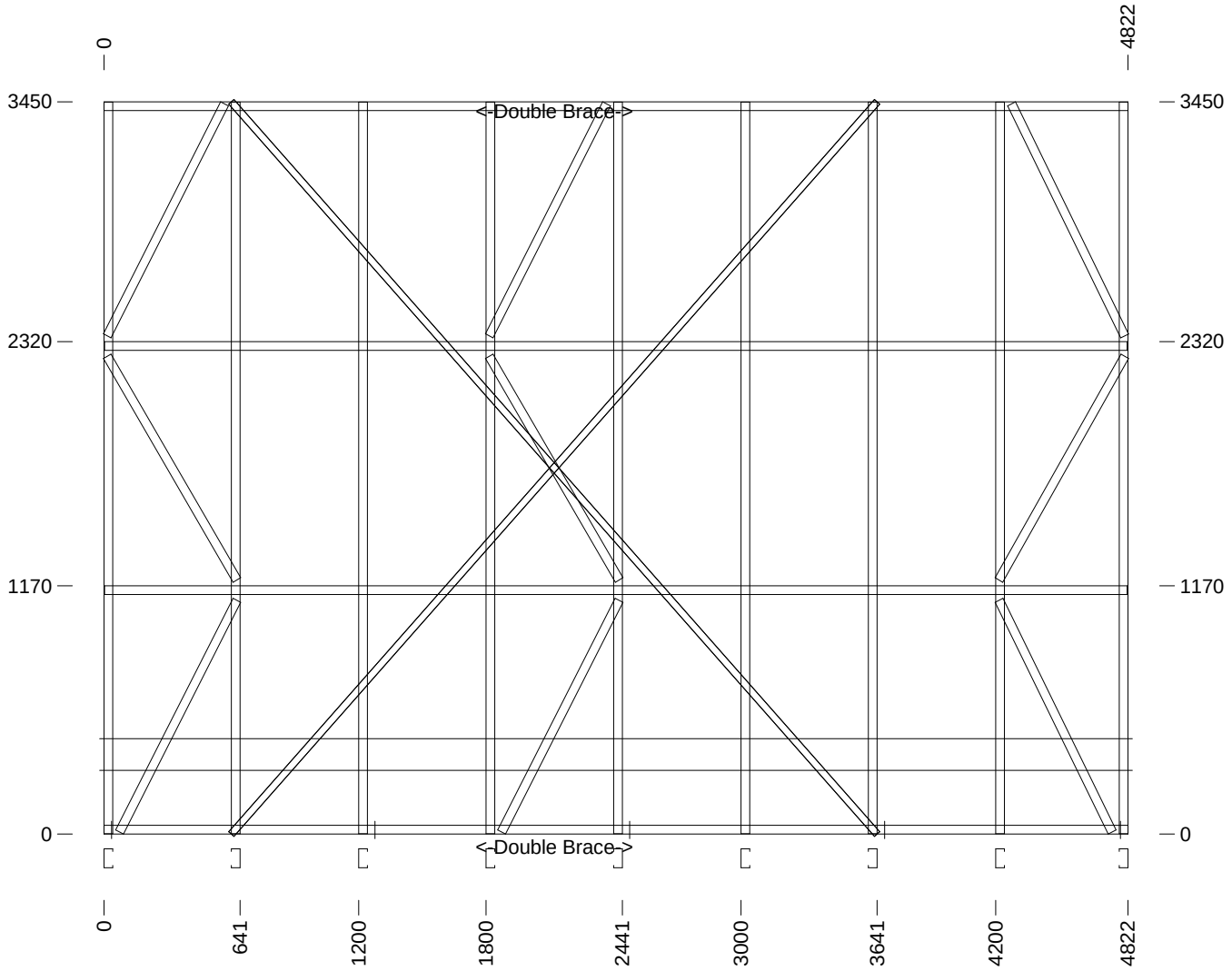

<<< Joins L8

Quantity Required = 1 Mark as L22 Header Engineering = Passed

Joins L15 >>>